Polo 1995 ➤

Running gear, axles, steering

Edition 02.1999

Protected by copyright. Copying for private or commercial purposes, in part or in whole, is not permitted unless authorised by Volkswagen AG. Volkswagen AG does not guarantee or accept any liability with respect to the correctness of information in this document. Copyright by Volkswagen AG.

satelettronica

List of Workshop Manual Repair GroupsList of Workshop Manual Repair GroupsList of Workshop Manual Repair Groups

Polo 1995 ➤

Running gear, axles, steering

Repair Group

00 - Technical data
40 - Front suspension
42 - Rear suspension
44 - Wheels, Tyres, Wheel alignment
48 - Steering

satelettronica

Copyright by Volkswagen AG. Volkswagen AG does not guarantee or accept any liability with respect to the correctness of information in this document. Copyright by Volkswagen AG. Protected by copyright. Copying for private or commercial purposes, in part or in whole, is not permitted unless authorised by Volkswagen AG.

Technical information should always be available to the foremen and mechanics, because their careful and constant adherence to the instructions is essential to ensure vehicle road-worthiness and safety. In addition, the normal basic safety precautions for working on motor vehicles must, as a matter of course, be observed.

All rights reserved.
No reproduction without prior agreement from publisher.

Copyright © 2010 Volkswagen AG, Wolfsburg

Contents

00 - Technical data . . . 1

1 Technical data . . . 1
1.1 Technical data . . . 1
1.2 Running gear >09.99 . . . 1
1.3 Running gear 10.99 > . . . 1
1.4 Steering . . . 1
1.5 Wheels, tyres . . . 2

40 - Front suspension . . . 3

1 Servicing front suspension . . . 3
1.1 Servicing front suspension . . . 3
1.2 I - Assembly overview sub-frame, anti-roll bar, wishbone . . . 6
1.3 Allocating anti-roll bar >09.99 . . . 13
1.4 Allocating anti-roll bar 10.99 > . . . 13
1.5 Ball joint installation position; 13" running gear . . . 13
1.6 Ball joint installation position; 14" running gear . . . 14
1.7 Checking swivel joint . . . 15
1.8 Removing and installing ball joint . . . 16
1.9 Removing and installing sub-frame >09.99 . . . 19
1.10 Removing and installing sub-frame 10.99 > . . . 21
1.11 II - Assembly overview wheel bearing, suspension strut . . . 24
1.12 Pressing front wheel bearing out and in with wheel bearing housing installed . . . 35
1.13 Removing and installing drive shafts . . . 39
1.14 Servicing front suspension strut>09.99 . . . 42
1.15 Servicing front suspension strut 10.99> . . . 46

2 Servicing drive shaft . . . 50
2.1 Servicing drive shaft . . . 50
2.2 Servicing drive shaft with constant velocity joint . . . 50
2.3 Assembly overview drive shaft with constant velocity joint . . . 51
2.4 Checking outer constant velocity joint . . . 58
2.5 Checking inner constant velocity joint . . . 60
2.6 Assembly overview drive shaft with triple roller joint . . . 65
2.7 Servicing drive shaft with triple roller joint . . . 68

42 - Rear suspension . . . 73

1 Servicing rear axle . . . 73
1.1 Servicing rear axle . . . 73
1.2 Removing and installing rear axle . . . 73
1.3 Assembly overview, rear axle beam >09.99 . . . 75
1.4 Removing and installing bonded rubber mounting >09.99 . . . 79
1.5 Assembly overview, rear axle beam 10.99 > . . . 83
1.6 Removing and installing bonded rubber mounting/hydraulic bonded rubber mounting 10.99> . . . 87
1.7 Assembly overview suspension strut . . . 88

2 Servicing wheel bearings . . . 91
2.1 Servicing wheel bearings . . . 91
2.2 Assembly overview wheel bearings, drum brakes>09.99 . . . 92
2.3 Assembly overview wheel bearings, disc brakes>09.99 . . . 99
2.4 Assembly overview wheel bearings 10.99> . . . 107
2.5 Removing and installing wheel bearing/wheel hub unit on vehicles with drum brakes . . . 110
2.6 Removing and installing wheel bearing/wheel hub on vehicles with disc brakes . . . 112

44 - Wheels, Tyres, Wheel alignment . . . 114

1 Vehicle alignment . . . 114

satelettronica

1.1 Vehicle alignment . . . 114
1.2 Test prerequisites: . . . 114
1.3 Vehicle alignment specifications . . . 115
1.4 Adjusting front wheel camber . . . 115
1.5 Checking left and right-hand wheel lock . . . 116
1.6 Calculating the direction of travel: . . . 117

48 - Steering . . . 118

1 Airbag, steering wheel, steering column . . . 118
1.1 Airbag, steering wheel, steering column . . . 118
1.2 Assembly overview driver's airbag, steering wheel>09.99 . . . 118
1.3 Removing and installing airbag unit>09.99 . . . 120
1.4 Removing and installing steering wheel>09.99 . . . 120
1.5 Removing and installing coil connector with slip ring>09.99 . . . 121
1.6 Assembly overview driver's airbag, steering wheel 10.99> . . . 123
1.7 Removing and installing driver's airbag unit 10.99 > . . . 124
1.8 Removing and installing steering wheel 10.99> . . . 127
1.9 Removing and installing coil connector with slip ring 10.99> . . . 128
1.10 Removing and installing coil connector with slip ring; vehicles with ESP 10.99> . . . 129
1.11 Removing and installing column tube with steering column . . . 130
1.12 Assembly overview steering column, column tube; >Vehicle identification No. 6N V 300 000 . . . 134
1.13 Dismantling and assembling column tube and steering column . . . 138
1.14 Assembly overview steering column, column tube; Vehicle identification No. 6N W 000 001> . . . 143
1.15 Dismantling and assembling column tube and steering column . . . 148

2 Servicing mechanical steering box . . . 155
2.1 Servicing mechanical steering box . . . 155
2.2 Removing and installing mechanical steering box . . . 155
2.3 Assembly overview mechanical steering box . . . 160
2.4 Checking play, security and boots on tie rod ends . . . 163
2.5 Checking left-hand track rod length and if necessary adjusting . . . 164
2.6 Assembling track rod . . . 164
2.7 Adjusting steering box . . . 165

3 Servicing power assisted steering . . . 167
3.1 Servicing power assisted steering . . . 167
3.2 Checking pump delivery pressure . . . 168
3.3 Removing and installing power assisted steering box . . . 170
3.4 Assembly overview power assisted steering box . . . 174
3.5 Assembly overview hydraulic pipes, power assisted steering box; RHD vehicles . . . 179
3.6 Removing and installing track rod . . . 180
3.7 Modified track rod ball joints . . . 181
3.8 Modified track rods . . . 182
3.9 Checking left-hand track rod length and if necessary adjusting . . . 183
3.10 Checking play, security and boots on tie rod ends . . . 185

4 Assembly overview vane pump, reservoir, hydraulic pipes . . . 185
4.1 Assembly overview vane pump, reservoir, hydraulic pipes . . . 185
4.2 Removing and installing power-assisted steering vane pump . . . 189
4.3 Removing and installing ribbed belt . . . 192

satelettronica

00 - Technical data

1 - Technical data

1.1 - Technical data

1.2 - Running gear >09.99

Model		All
Wheelbase	mm	2406
Track, unladen	mm	1372 front, Wheel offset 35 1400 rear, Wheel offset 35 1356 front, Wheel offset 43 1384 rear, Wheel offset 43 1352 front, Wheel offset 45 1380 rear, Wheel offset 45 1366 front, Wheel offset 43 (16V) 1394 rear, Wheel offset 43 (16V) 1362 front, Wheel offset 45 (16V) 1390 rear, Wheel offset 45 (16V)
Turning circle dia. Mechanical steering box Power assisted steering box	m	10.3 10.6

1.3 - Running gear 10.99 >

Model		All
Wheelbase	mm	2406
Track, unladen	mm	1392 front, Wheel offset 35 1400 rear, Wheel offset 35 1376 front, Wheel offset 43 1384 rear, Wheel offset 43 1372 front, Wheel offset 45 1380 rear, Wheel offset 45 1386 front, Wheel offset 43 (16V) 1394 rear, Wheel offset 43 (16V) 1382 front, Wheel offset 45 (16V) 1390 rear, Wheel offset 45 (16V)
Turning circle dia. Mechanical steering box Power assisted steering box	m	10.3 10.6

1.4 - Steering

Model	All	
Steering gear	mechanical steering box	Power assisted steering box
Steering wheel turns from lock to lock	3.93	2.89
Overall steering ratio	19.93:1	15.35:1

satelettronica

1.5 - Wheels, tyres

General information; information concerning wheels/tyre combinations, winter tyres, snow chains and recommended tyre manufacturers is found in "Fault finding wheels, tyres" binder.

Protected by copyright. Copying for private or commercial purposes, in part or in whole, is not permitted unless authorised by Volkswagen AG. Volkswagen AG does not guarantee or accept any liability with respect to the correctness of information in this document. Copyright by Volkswagen AG.

satelettronica

40 - Front suspension

1 - Servicing front suspension

1.1 - Servicing front suspension

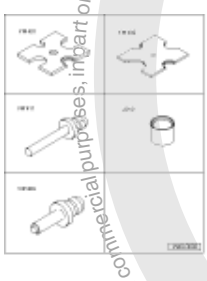

Protected by copyright. Copying for private or commercial purposes, in part or in whole, is not permitted unless authorised by Volkswagen AG. Volkswagen AG does not guarantee or accept any liability with respect to the correctness of information in this document. Copyright by Volkswagen AG.

Special tools and workshop equipment required

- VW 401 Press plate
- VW 402 Press plate
- VW 411 Press tool
- 2010 Tube
- VW 409 Press tool

satelettronica

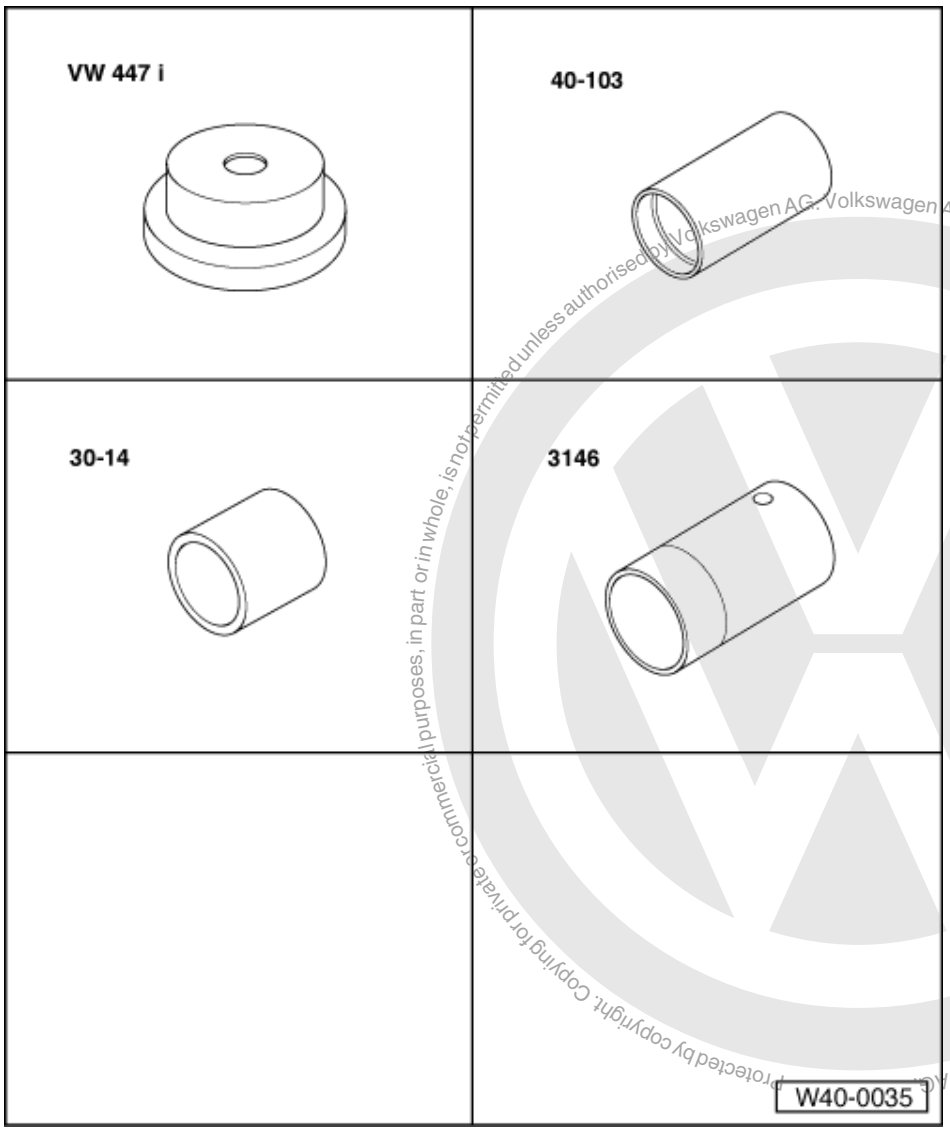

Copyright by Volkswagen AG. Volkswagen AG does not guarantee or accept any liability with respect to the correctness of information in this document. Copyright by Volkswagen AG. Protected by copyright. Copying for private or commercial purposes, in part or in whole, is not permitted unless authorised by Volkswagen AG.

satelettronica

Special tools and workshop equipment required

- VW 447 i Thrust plate
- 40-103 Support
- 30-14 Tube
- 3146 Tube

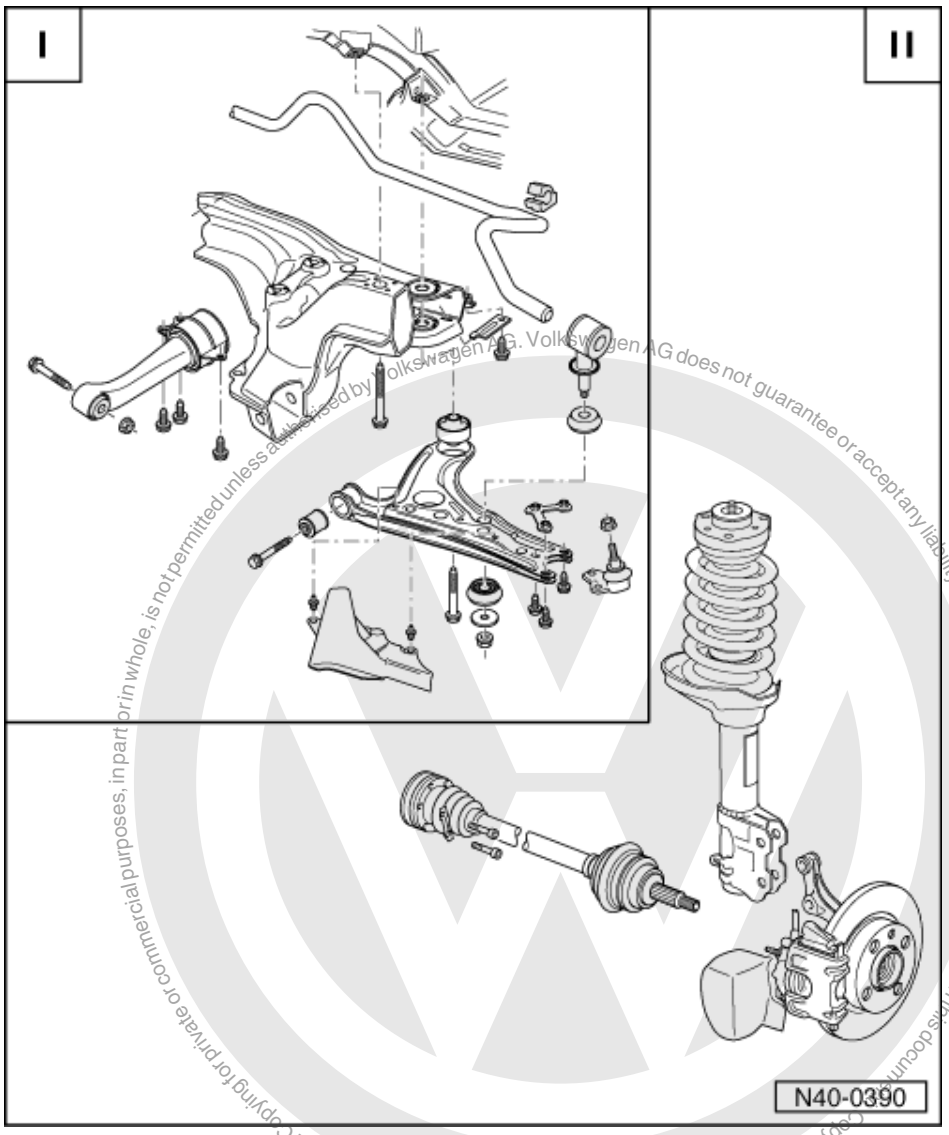

Copyright Volkswagen AG. Protected by copyright. Copying for private or commercial purposes, in part or in whole, is not permitted unless authorised by Volkswagen AG. Volkswagen AG does not guarantee or accept any liability with respect to the correctness of information in this document.

I - Removing and installing sub-frame, anti-roll bar and wishbone=> Page 6

II - Removing and installing wheel bearings, suspension strut and drive shaft => Page 24

satelettronica

1.2 - I - Assembly overview sub-frame, anti-roll bar, wishbone

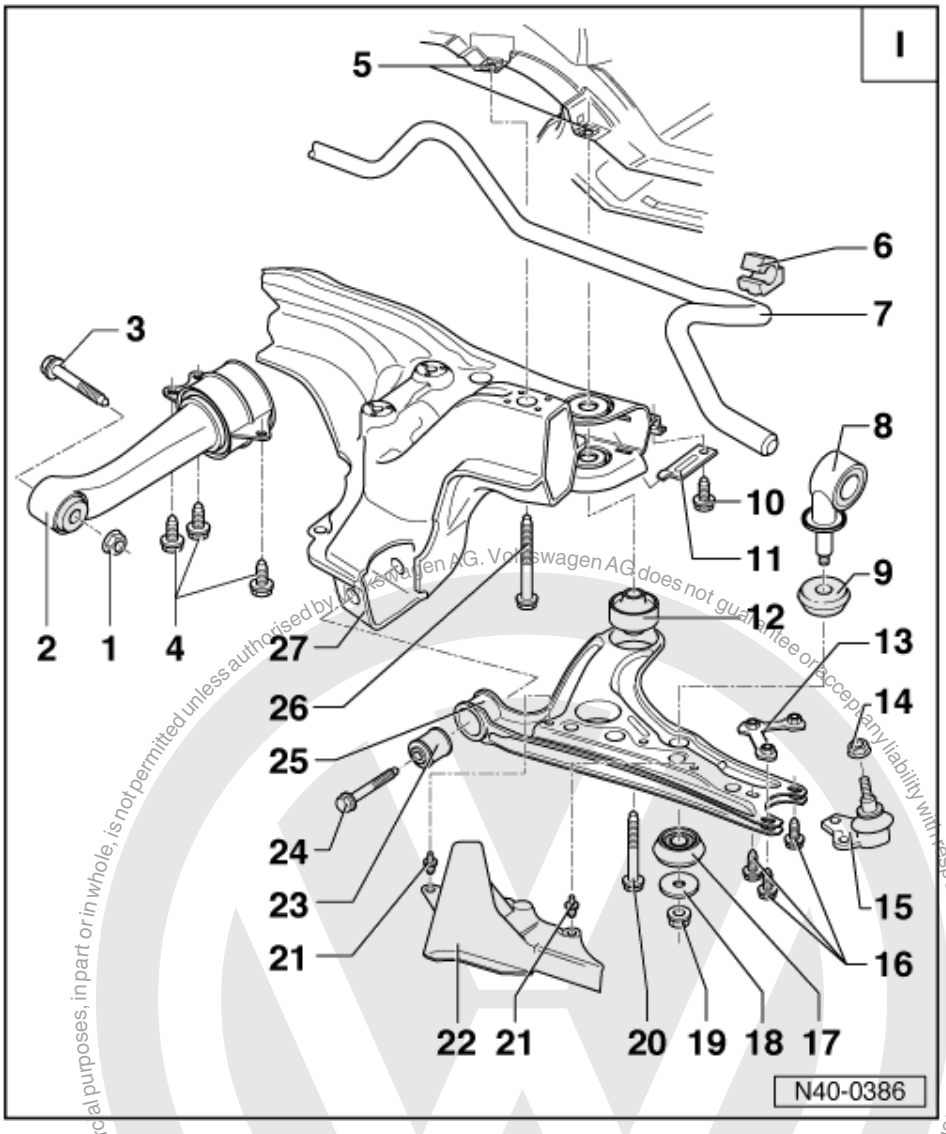

Notes:

- If a vehicle has to be moved after removing the drive shaft, first install outer joint and tighten to 50 Nm otherwise the wheel bearing will be damaged.
- It is not permitted to carry out welding and straightening operations on load bearing suspension components or those components which locate the wheels.
- Always renew self-locking nuts.
- Always renew corroded nuts/bolts.

1 Hexagon nut
- 40 Nm and turn 90° further
- Renew each time after removing

Protected by copyright. Copyright by Volkswagen AG. Volkswagen AG does not guarantee or accept any liability with respect to the correctness of information in this document. Copyright by Volkswagen AG. Reproduction, in whole or in part, for commercial purposes, is not permitted unless authorised by Volkswagen AG.
satelettronica

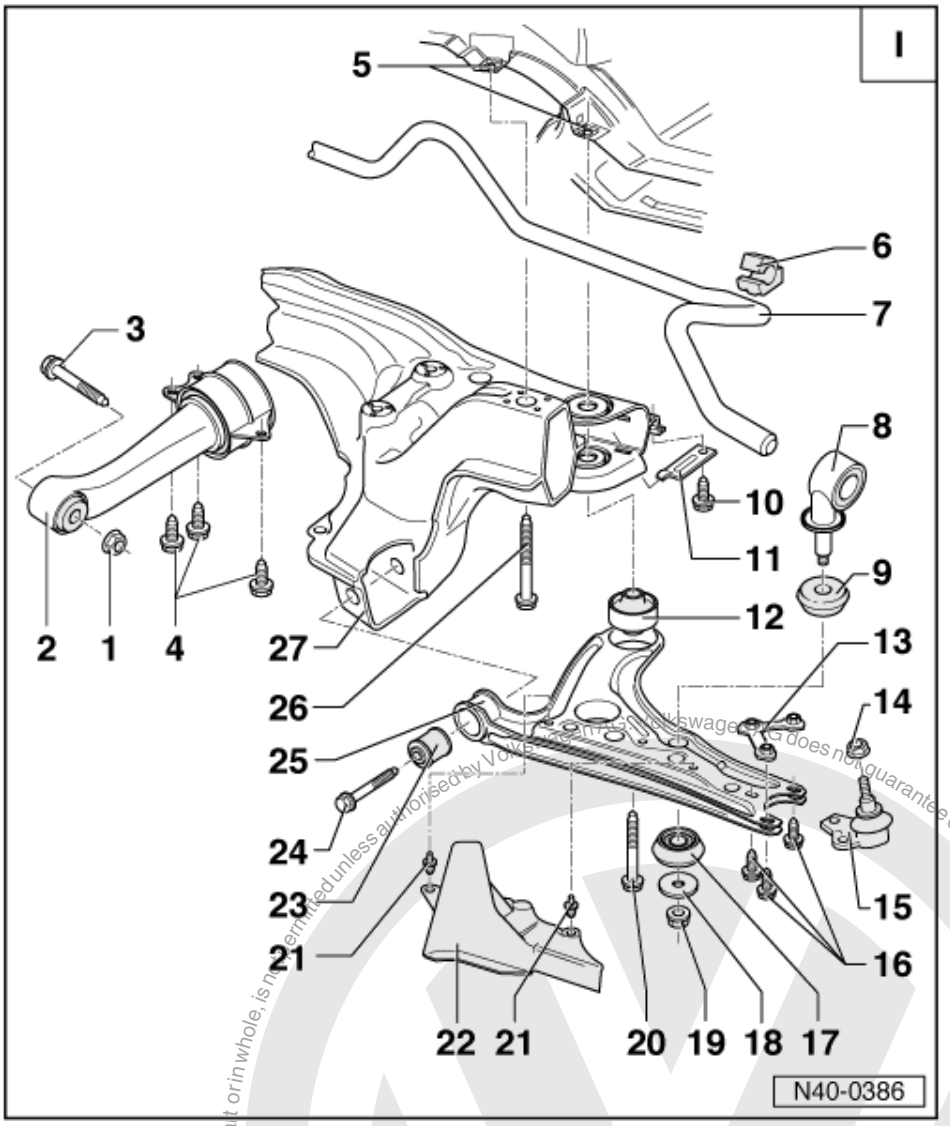

2 Pendulum support
- Unbolting and bolting on
  => Fig. 6

3 Hexagon head bolt
- Renew each time after removing

4 Hexagon head bolt
- Unbolting and bolting on
  => Fig. 6
- Renew each time after removing

5 Captivated nut

The captive nut cannot be reworked. If the nut is damaged, replace complete mounting bracket.

6 Rubber mounting

Installation position:
Open side faces towards rear

satelettronica

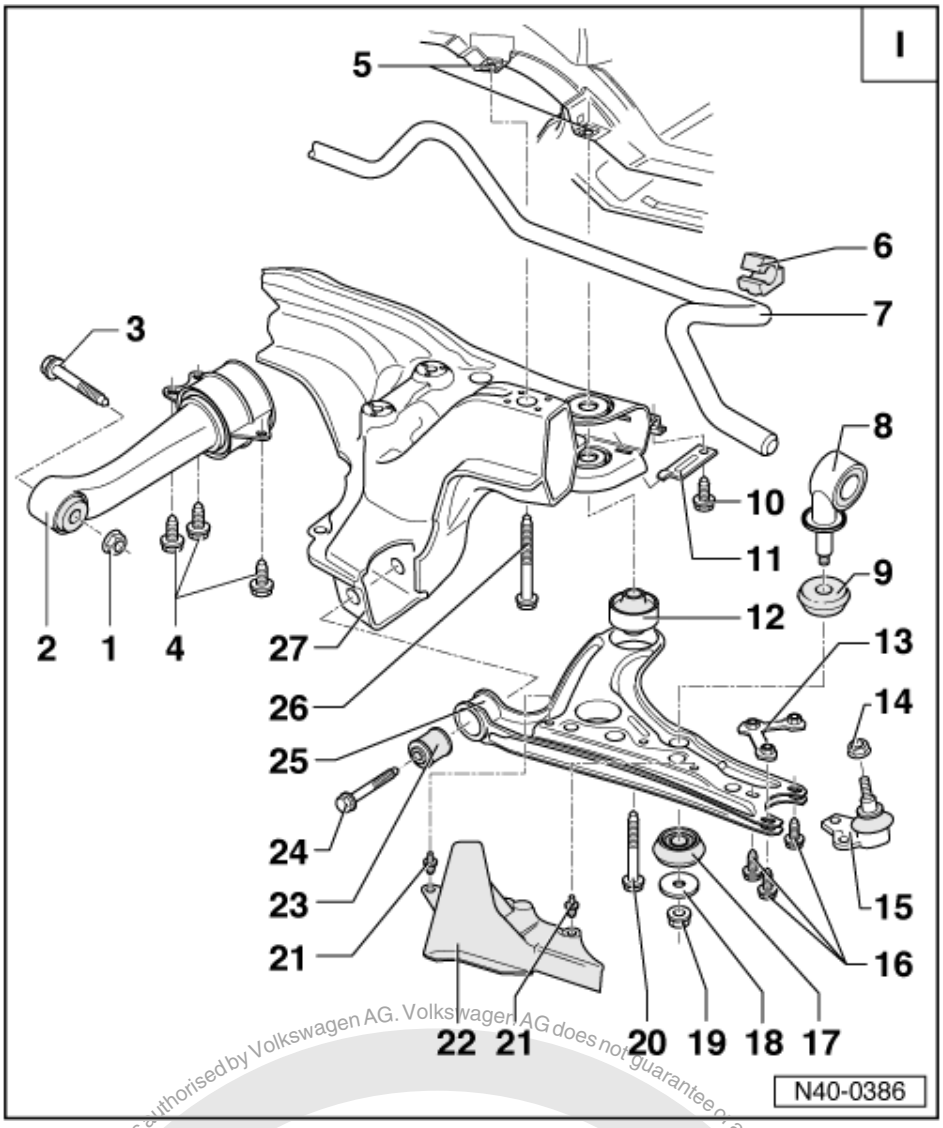

7 Anti-roll bar
8 Connecting link
Installation position:
Eye with rubber bush points opposite to normal direction of travel
9 Connecting link mounting
- Conical side to wishbone

10 25 Nm
11 Clamp
12 Rear wishbone mounting
- Installation position => Fig. 4
- Pressing out and in => Fig. 3

13 Plate with nuts
14 35 Nm
- Renew each time after removing

Protected by copyright. Copying for private or commercial purposes, in part or in whole, is not permitted unless authorised by Volkswagen AG. Volkswagen AG does not guarantee or accept any liability with respect to the correctness of information in this document. Copyright by Volkswagen AG.
satelettronica

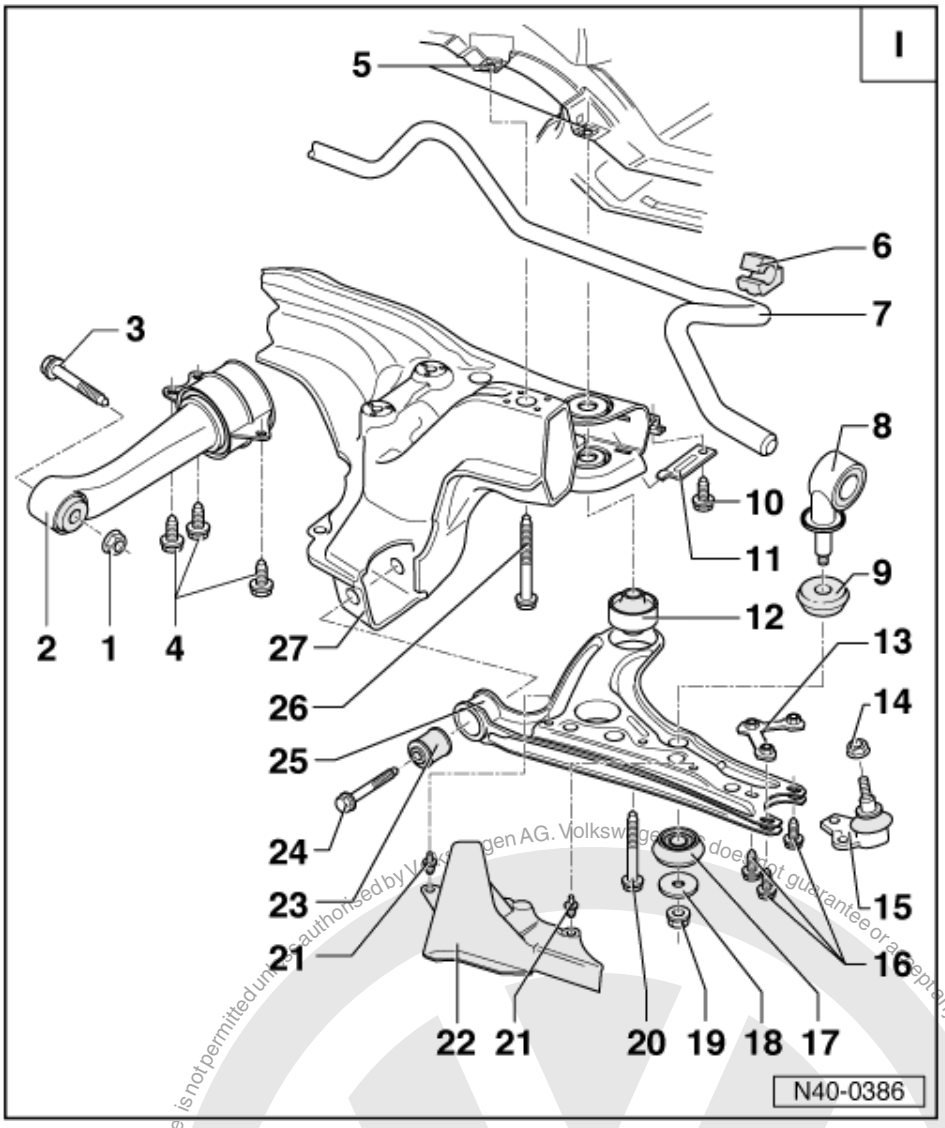

15 Swivel joint

- Checking => Page 15
- Removing and installing => Page 16
- Before removing mark installation position. When renewing ball joint, set to centre of elongated hole and check track

16 Hexagon head bolt

- 20 Nm and turn 90° further
- Renew each time after removing

17 Connecting link mounting

- Conical side to wishbone

18 Washer

- Collar faces away from mounting

19 25 Nm

- Renew each time after removing

satelettronica
Protected by copyright. Copying for private or commercial purposes, in part or in whole is not permitted unless authorised by Volkswagen AG. Volkswagen AG does not guarantee or accept any liability with respect to the correctness of information in this document. Copyright by Volkswagen AG.

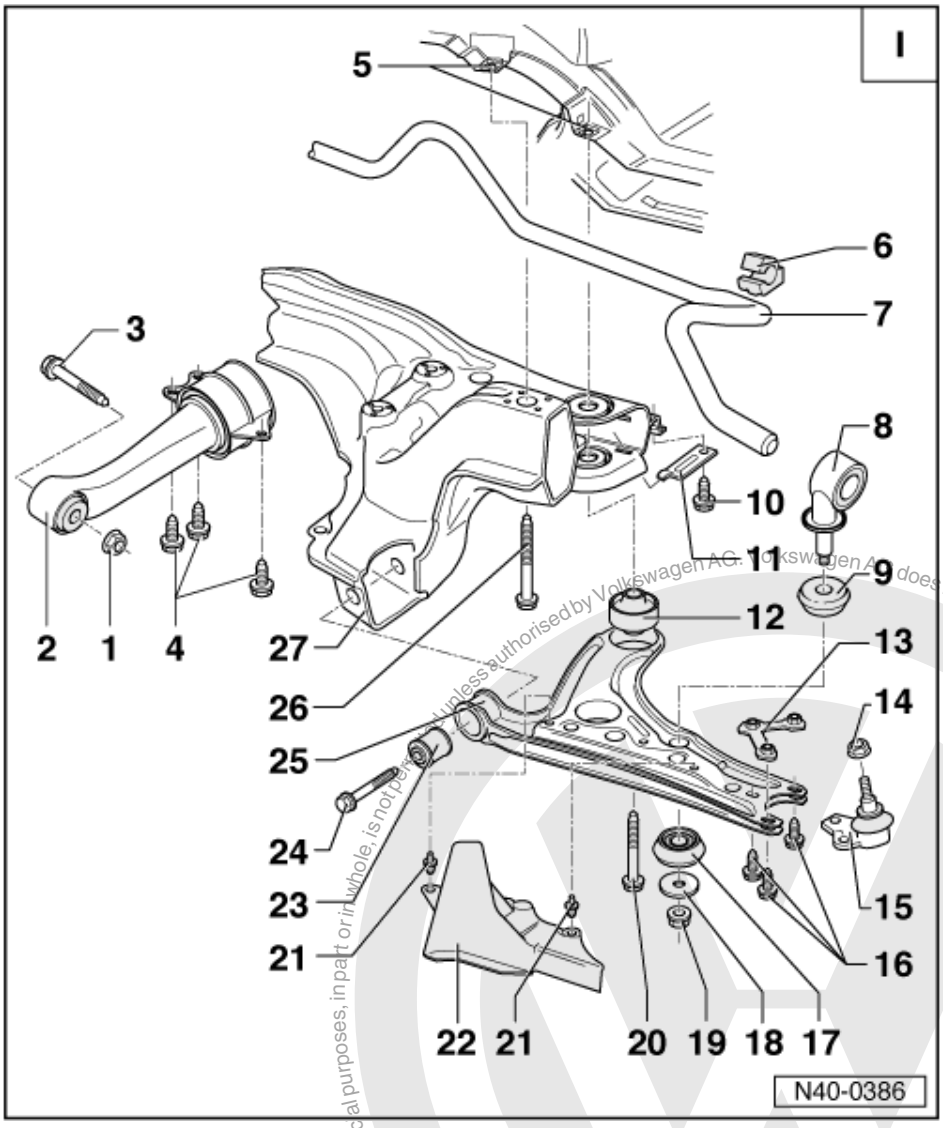

20 Hexagon bolt
M 12 x 1.5 x 80
- 50 Nm and turn 90° further
- Renew each time after removing

21 Spreader rivet

22 Air deflector plate

23 Front wishbone mounting
- Pressing out => Fig. 1
- Pressing in => Fig. 2

24 Hexagon bolt, 70 Nm

25 Wishbone

26 Hexagon bolt
M 12 x 1.5 x 100
- 50 Nm and turn 90° further
- Renew each time after removing

27 Sub-frame

Protected by copyright. Copying for private or commercial purposes, in part or in whole, is not permitted unless authorised by Volkswagen AG. Volkswagen AG does not guarantee or accept any liability with respect to the correctness of information in this document. Copyright by Volkswagen AG.
satelettronica

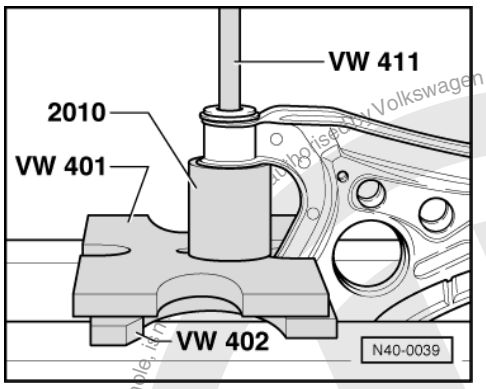

-> Fig.1 Pressing out front wishbone mounting

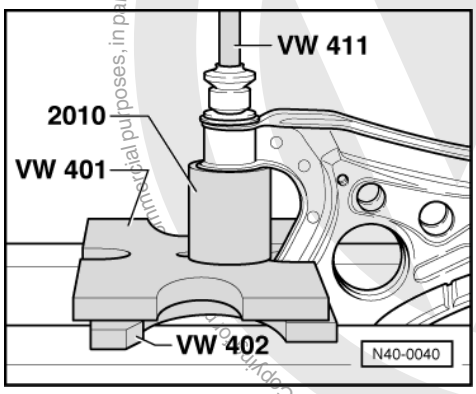

-> Fig.2 Pressing in wishbone front mounting

Note:

Before pressing in coat with acid-free lubricant e.g. soft soap or tyre assembly paste.

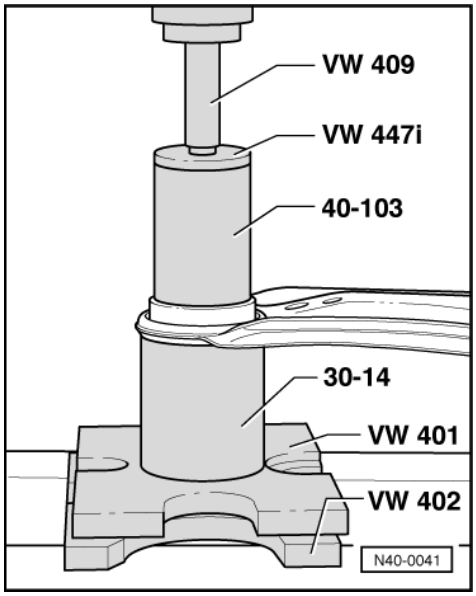

Protected by copyright. Copyright by Volkswagen AG. Volkswagen AG does not guarantee or accept any liability with respect to the correctness of information in this document. Copyright by Volkswagen AG.
satelettronica

-> Fig.3 Pressing wishbone rear bush out

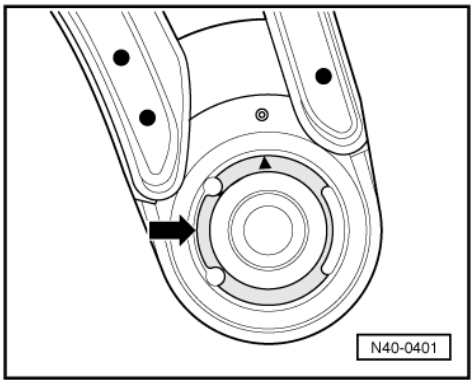

-> Fig.4 Installation position of rear wishbone mounting

One of the embossed arrows points towards the mark on wishbone.
The section of the mounting -arrow- must always point to outside of vehicle.

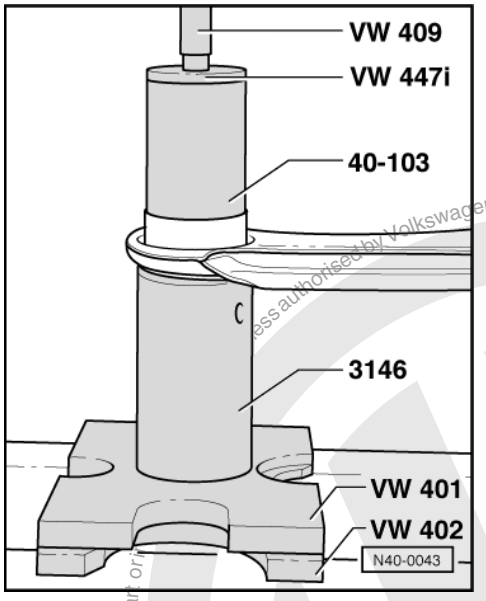

-> Fig.5 Pressing wishbone rear bush in

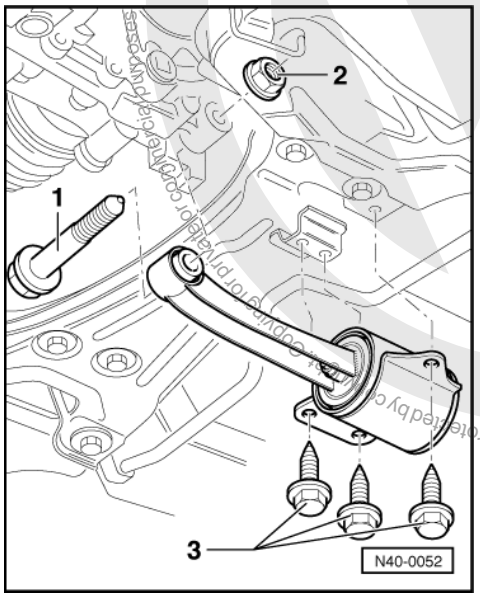

satelettronica
Protected by copyright. Copying for private or commercial purposes, in part or in whole, is not permitted unless authorised by Volkswagen AG. Volkswagen AG does not guarantee or accept any liability with respect to the correctness of information in this document. Copyright by Volkswagen AG.

-> Fig.6 Unbolting and bolting on pendulum support

1 - Hexagon bolt
2 - Hexagon nut 50 Nm
3 - Hexagon bolt, 30 Nm
M8 x 20; strength class 8.1

Modification from 12.96
From vehicle identification No.: 6N ZVW 133102
modified hexagon bolts -3- have been introduced.

Hexagon bolts -3-, M8 x 22; strength class 9.1
Tightening torque; 20 Nm and turn 90° further
Renew hexagon bolts after each removal

1.3 - Allocating anti-roll bar >09.99

Model/equipment		Anti-roll bar
Polo 1.05 ltr.	33 KW	-
Polo 1.3 ltr. Polo 1.4 ltr.	40 kW 40, 44 KW	-
Polo 1.4 ltr. 16V	74 KW	20 mm ø
Polo 1.6 ltr.	55 KW 88 KW	18 mm ø 22 mm ø
Polo 1.9 ltr. (Diesel)	47 KW	18 mm ø

1.4 - Allocating anti-roll bar 10.99 >

Model/equipment		Anti-roll bar
Polo 1.05 ltr. with mechanical steering box	33 KW	-
Polo 1.05 ltr. with P.A.S Polo 1.3 ltr. Polo 1.4 ltr.	33 kW 40 KW 40, 44 KW	18 mm ø
Polo 1.4 ltr. 16V	74 KW	20 mm ø
Polo 1.6 ltr.	55 KW 92 KW	18 mm ø 22 mm ø
Polo 1.9 ltr. (Diesel)	47 KW	18 mm ø

1.5 - Ball joint installation position; 13" running gear

The 13'running gear is allocated to the following engines:

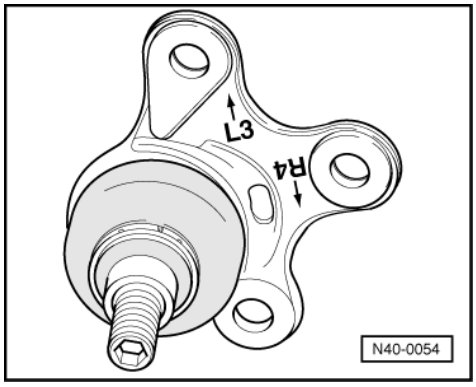

Protected by copyright. Copying for private or commercial purposes, in part or in whole, is not permitted unless authorised by Volkswagen AG. Volkswagen AG does not guarantee or accept any liability with respect to the correctness of information in this document. Copyright by Volkswagen AG.
satelettronica

37 kW	44 kW	44 kW Diesel	47 kW Diesel
74 kW 16 V ▸09.99			
55 kW with/without ABS ▸09.99			
55 kW without ABS10.99 ▸			

-> Ball joint, left

-L- = left
-3- = 13'

Arrow with marking "L3" points forwards

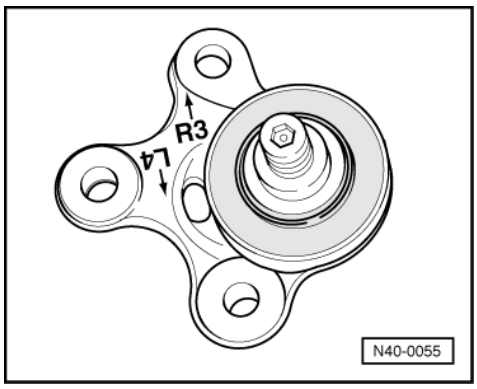

-> Ball joint, right

Arrow with marking "R3" points forwards

-R- = right
-3- = 13'

Pay particular attention to installation position of ball joint!

Incorrect installation position will change the caster angle

1.6 - Ball joint installation position; 14" running gear

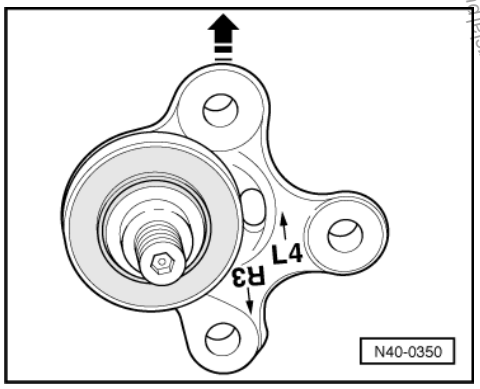

The 14'running gear is allocated to the following engines:

55 kW Autom. version for Japan
55 kW with ABS 10.99 ▸
74 kW from veh. identity No. 6N XY 281179

Protected by copyright. Copying for private or commercial purposes, in part or in whole, is not permitted unless authorised by Volkswagen AG. Volkswagen AG does not guarantee or accept any liability with respect to the correctness of information in this document. Copyright by Volkswagen AG.
satelettronica

88/92 kW 16 V

-> Ball joint, left

-L- = left
-4- = 14'

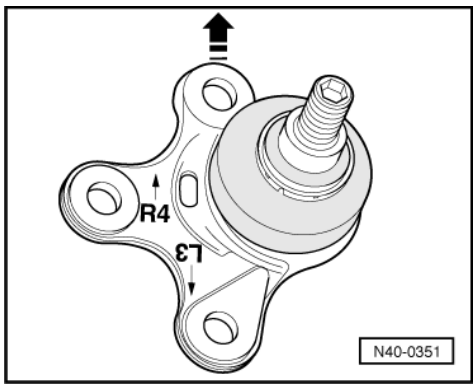

Arrow with marking "L4" points forwards

The arrow on the illustration symbolises forwards

-> Ball joint, right

Arrow with marking "R4" points forwards

The arrow on the illustration symbolises forwards
-R- = right
-4- = 14'

Pay particular attention to installation position of ball joint!

Incorrect installation position will change the caster angle

1.7 - Checking swivel joint

Checking axial clearance

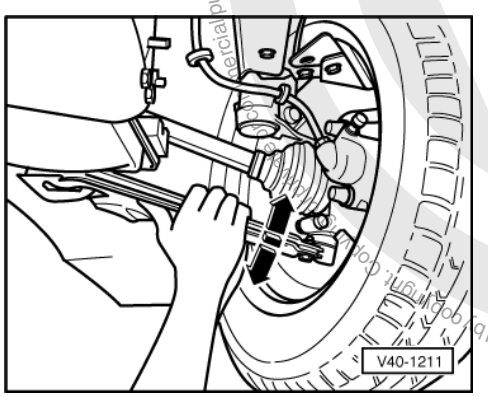

- -> Forcibly pull swivel joint down and press up again.

Protected by copyright. Copyright by Volkswagen AG.
Copyright by Volkswagen AG. Volkswagen AG does not guarantee or accept any liability with respect to the correctness of information in this document. Copyright by Volkswagen AG.
satelettronica

Checking radial play

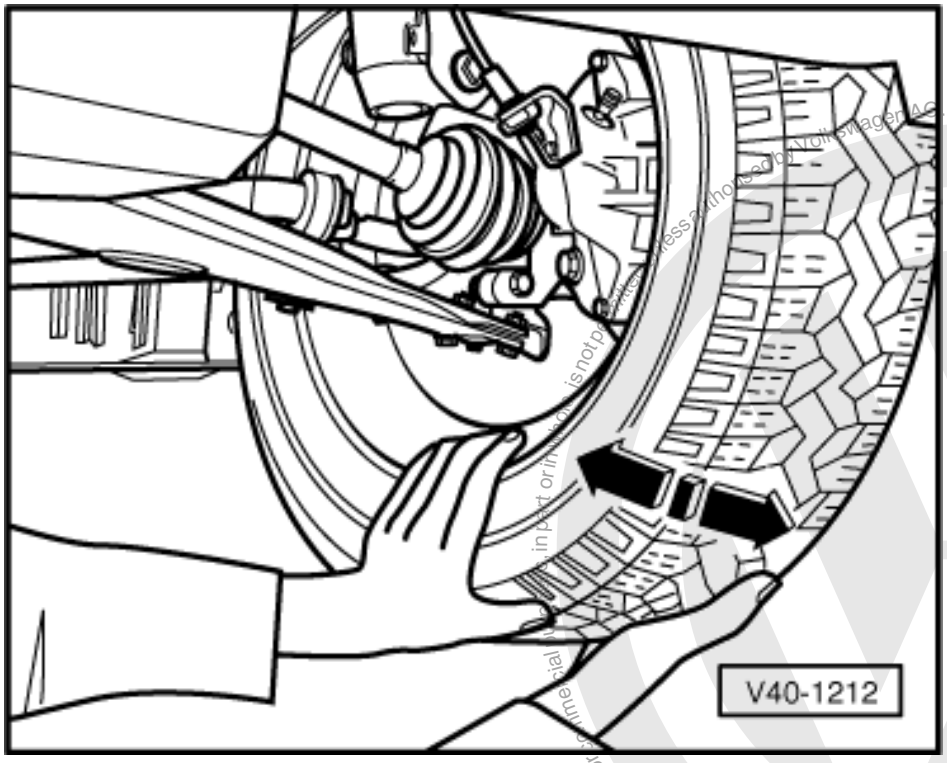

- -> Press lower part of wheel forcefully outwards and inwards.

Notes:

- There must be no perceptible or visual "play" when carrying out both tests.
- Observe ball joint during checks.
- Take into account possible existing wheel bearing play or "play" in upper suspension strut mounting.
- Check rubber boot for damage, replace ball joint if necessary

1.8 - Removing and installing ball joint

Special tools and workshop equipment required

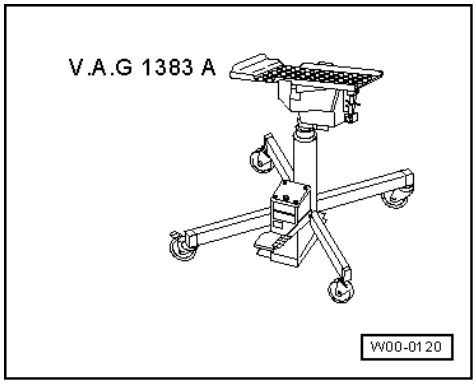

- V.A.G 1383 A Gearbox jack

satelettronica
Volkswagen AG does not guarantee or accept any liability with respect to the correctness of information in this document. Copyright by Volkswagen AG.
Protected by copyright. Copying for private or commercial purposes, in part or in whole, is not permitted unless authorised by Volkswagen AG.

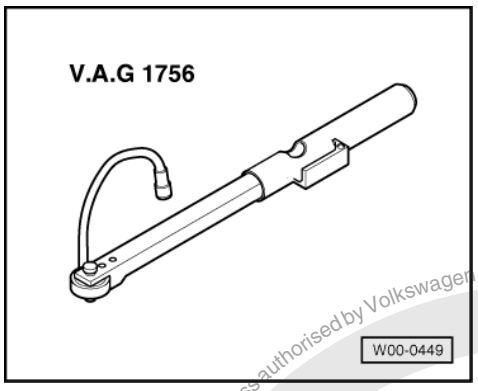

- V.A.G 1756 Angle wrench

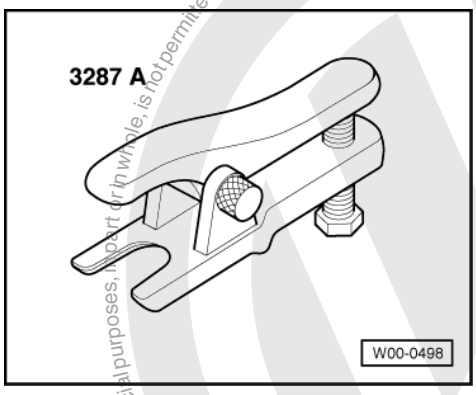

- 3287A Ball joint puller

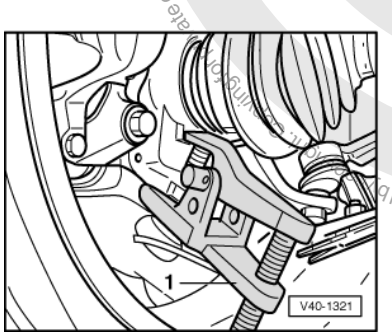

-> 1 - Ring spanner insert (commercial type, 16 mm AF)
2 - Slotted ring spanner insert (commercial type, 16 mm AF)

Removing

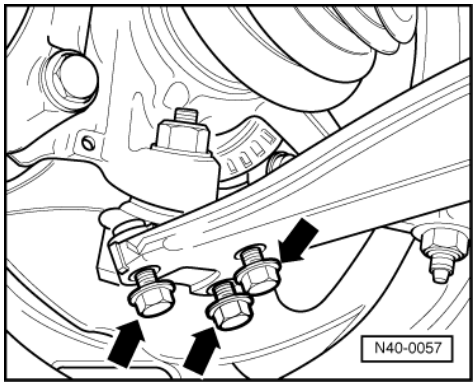

Protected by copyright. Copying for private or commercial purposes, in part or in whole, is not permitted unless authorised by Volkswagen AG. Volkswagen AG does not guarantee or accept any liability with respect to the correctness of information in this document. Copyright by Volkswagen AG.
satelettronica

- Loosen 12-point nut.
- Mark installation position of bolts.
- -> Remove bolts (arrows).

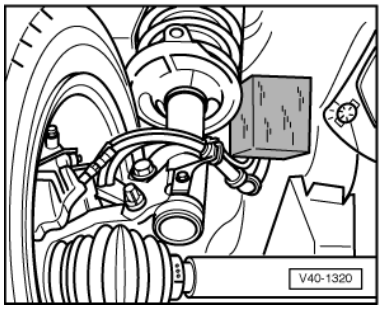

- -> Swing wheel with suspension strut outwards and support.

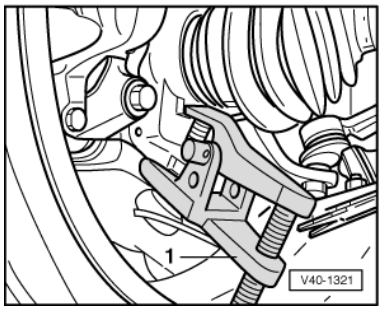

- -> Install ball joint splitter as shown in illustration and press out ball joint.

Notes:

- Place gearbox jack V.A.G 1383/A, or similar, underneath (danger of accident through falling parts when pressing out the ball joint).
- To protect swivel joint threads leave nut on a few turns.

Installing

- Fit ball joint in wheel bearing housing.

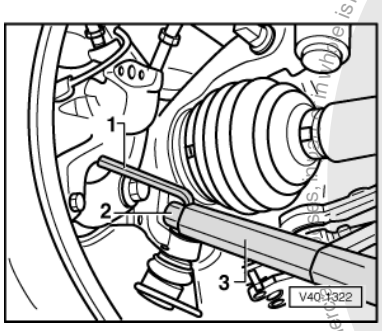

- -> Screw on new self-locking nut, and counter-hold with hexagon key (5 mm AF).

  1 - Hexagon key (5 mm AF), shortened approx. 10 mm.
  2 - Ring spanner insert or slotted ring spanner insert => Fig. 40-1323

satelettronica
Protected by copyright. Copying for private or commercial purposes, in whole or in part, is not permitted unless authorised by Volkswagen AG. Volkswagen AG does not guarantee or accept any liability with respect to the correctness of information in this document. Copyright by Volkswagen AG.

3 - V.A.G 1331

- Secure ball joint to wishbone (bolts on old marks).

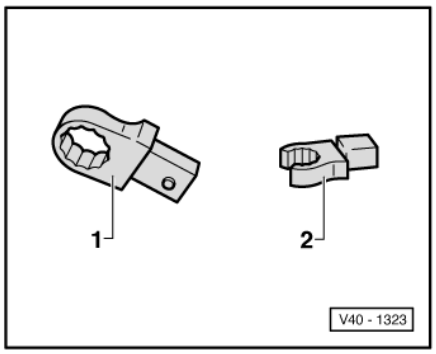

-> 1 - Ring spanner insert (commercial type, 16 mm AF)
2 - Slotted ring spanner insert (commercial type, 16 mm AF)

Note:
Check bellows is not damaged or twisted.
Tightening torques
Ball joint to wishbone: 20 Nm + turn 90° further
Ball joint to wheel bearing housing: 35 Nm

1.9 - Removing and installing sub-frame >09.99

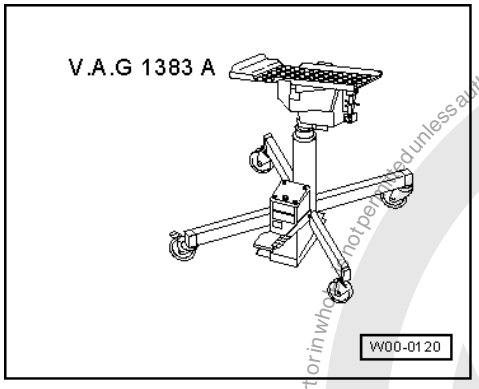

Special tools and workshop equipment required
- V.A.G 1383 A Gearbox jack

Removing

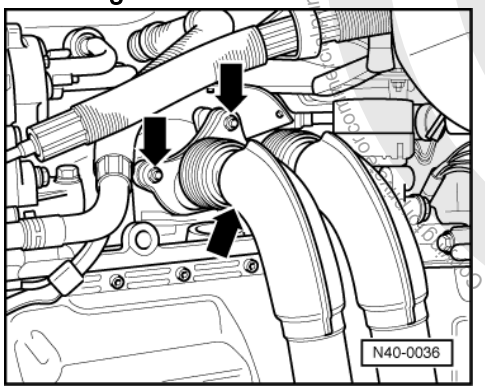

satelettronica
Protected by copyright. Copyright by Volkswagen AG.
Copyright by Volkswagen AG. Volkswagen AG does not guarantee or accept any liability with respect to the correctness of information in this document.

- -> Unbolt exhaust pipe.
- Unbolt steering box from sub-frame and e.g. secure with wire.

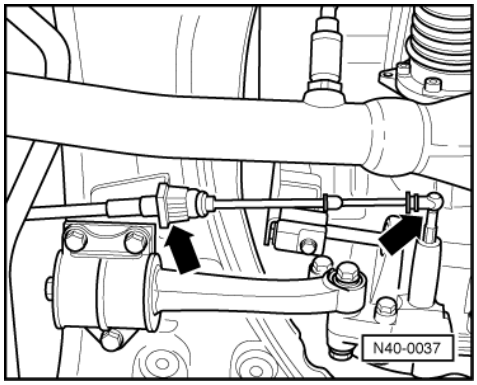

- -> Unclip cable (arrows).

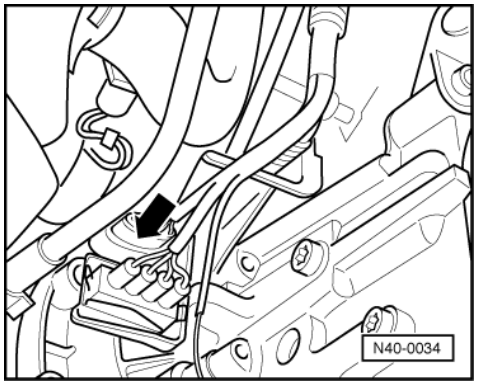

- -> Separate connector for Lambda probe (arrow).

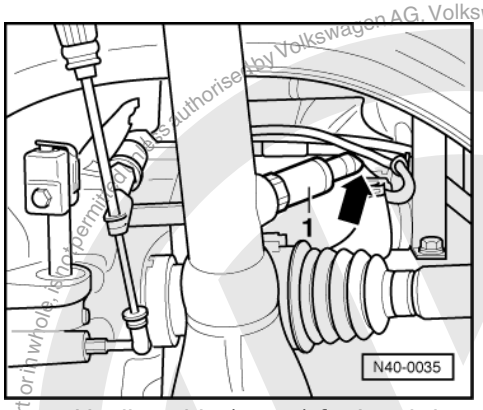

- -> Unclip cable (arrow) for Lambda probe at retainer.
- Remove Lambda probe -1-.

Protected by copyright. Copying for private or commercial purposes, in part or in whole, is not permitted unless authorised by Volkswagen AG. Volkswagen AG does not guarantee or accept any liability with respect to the correctness of information in this document. Copyright by Volkswagen AG.
satelettronica

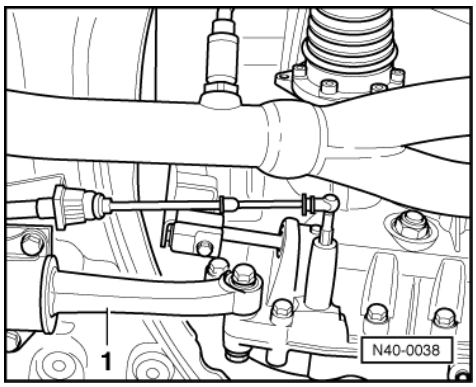

- -> Unbolt pendulum support -1- from gearbox.
- Mark installation position of bolts.

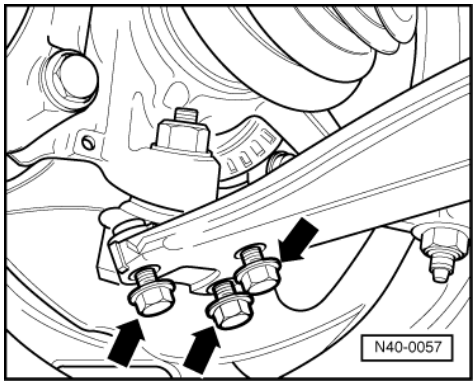

- -> Remove bolts (arrows).
- Place gearbox jack V.A.G 1383 A under sub-frame.
- Remove bolts for sub-frame.
- Lower sub-frame using gearbox jack V.A.G 1383 A.

Installing

Installation is carried out in the reverse sequence, when doing this note the following:

Before inserting bolts for sub-frame position steering box on sub-frame and insert bolts.

1.10 - Removing and installing sub-frame 10.99 >

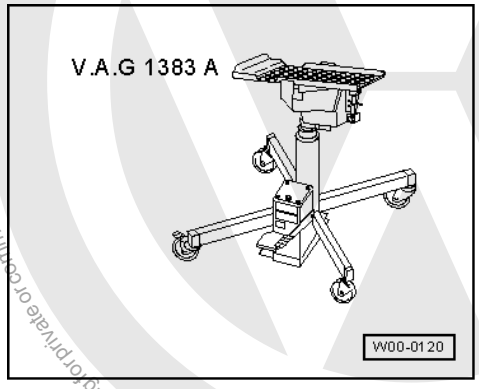

Special tools and workshop equipment required

- V.A.G 1383 A Gearbox jack

satelettronica
Protected by copyright. Copying for private or commercial purposes, in part or in whole, is not permitted unless authorised by Volkswagen AG. Volkswagen AG does not guarantee or accept any liability with respect to the correctness of information in this document. Copyright by Volkswagen AG.

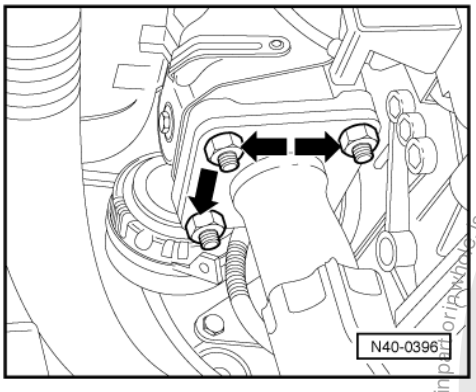

Removing

- -> Unbolt exhaust pipe.
- Unbolt steering box from sub-frame and e.g. secure with wire.

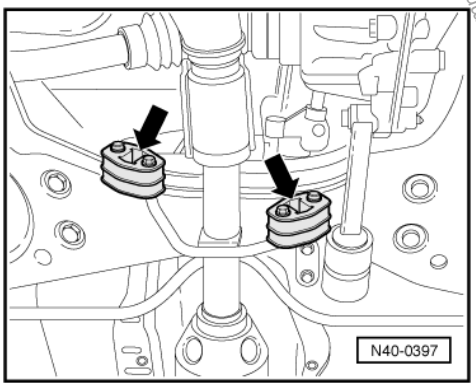

- -> Unhook exhaust pipe from subframe -arrows-.

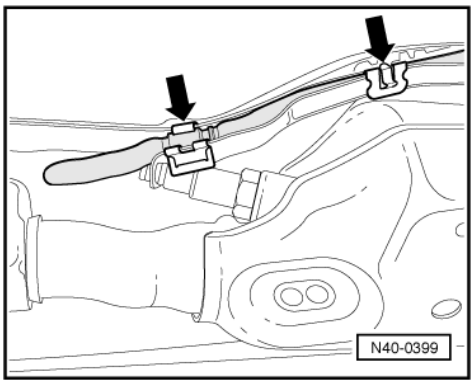

- -> Unclip cable for Lambda probe.
- Remove reinforcement for tunnel.

Protected by copyright. Copying for private or commercial purposes, in part or in whole, is not permitted unless authorised by Volkswagen AG. Volkswagen AG does not guarantee or accept any liability with respect to the correctness of information in this document. Copyright by Volkswagen AG.
satelettronica

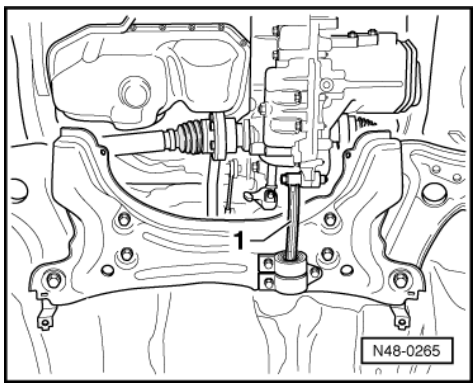

- -> Unbolt pendulum support -1- from gearbox.

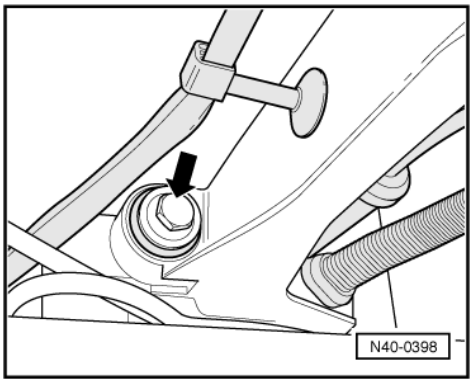

- -> Remove bracket for gear change cables from assembly carrier (arrow).

  Only fitted on vehicles with cable operated gear change.

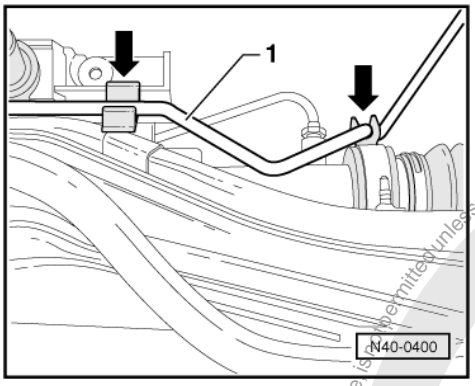

- -> Unclip return supply hose.

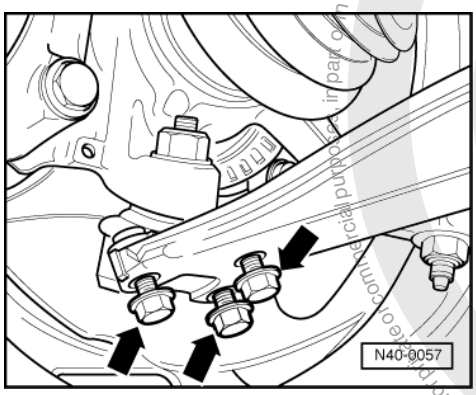

- Mark installation position of bolts.
- -> Remove bolts (arrows).
- Place gearbox jack V.A.G 1383 A under sub-frame.

Protected by copyright. Copying for private or commercial purposes, in part or in whole, is not permitted unless authorised by Volkswagen AG. Volkswagen AG does not guarantee or accept any liability with respect to the correctness of information in this document. Copyright by Volkswagen AG.
satelettronica

- Remove bolts for sub-frame.
- Take out sub-frame.

Installing

Installation is carried out in the reverse sequence, when doing this note the following:

Before inserting bolts for sub-frame position steering box on sub-frame and insert bolts.

1.11 - II - Assembly overview wheel bearing, suspension strut

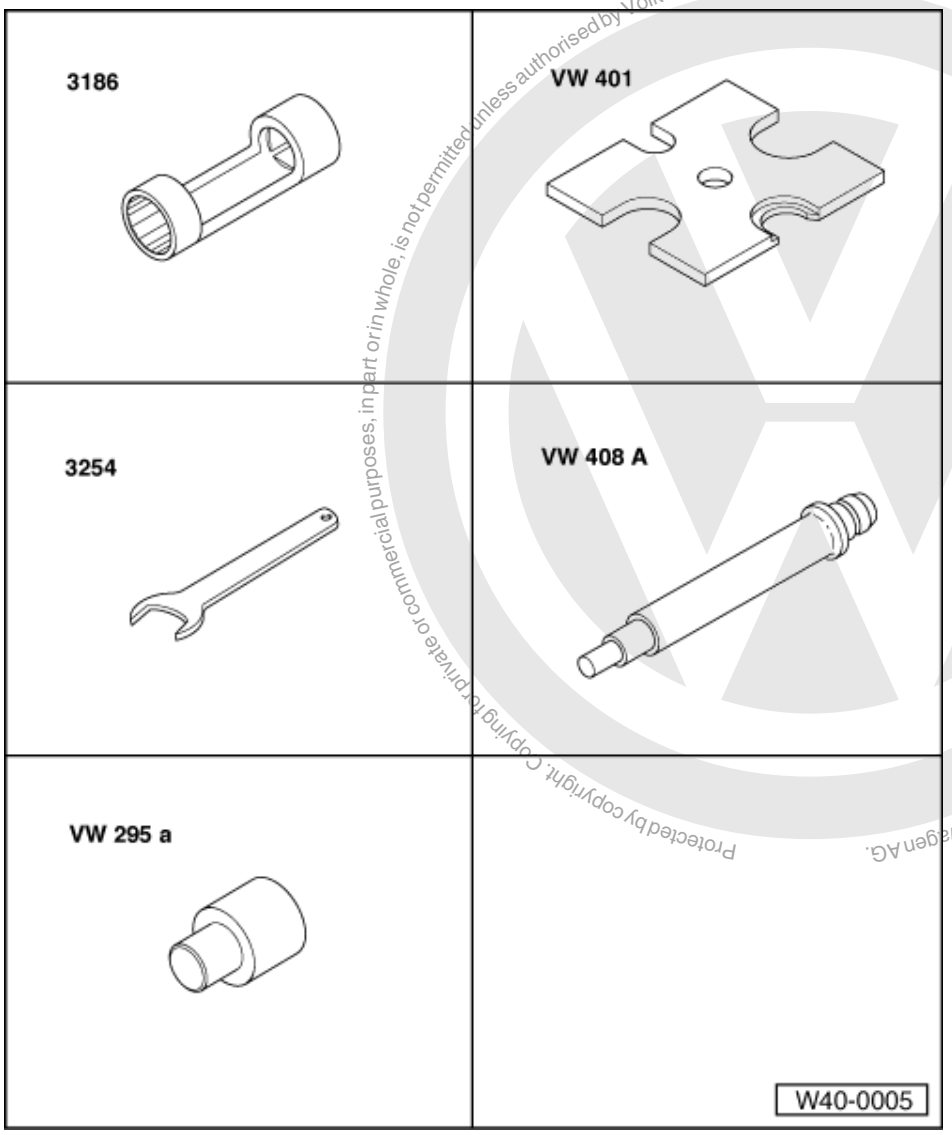

Special tools and workshop equipment required

- 3186 Special socket 21 mm AF
- VW 401 Press plate
- 3254 Open jaw spanner 50 mm AF
- VW 408 A Press tool
- VW 295a Adapter

Protected by copyright. Copying for private or commercial purposes, in part or in whole, is not permitted unless authorised by Volkswagen AG. Volkswagen AG does not guarantee or accept any liability with respect to the correctness of information in this document. Copyright by Volkswagen AG.
satelettronica

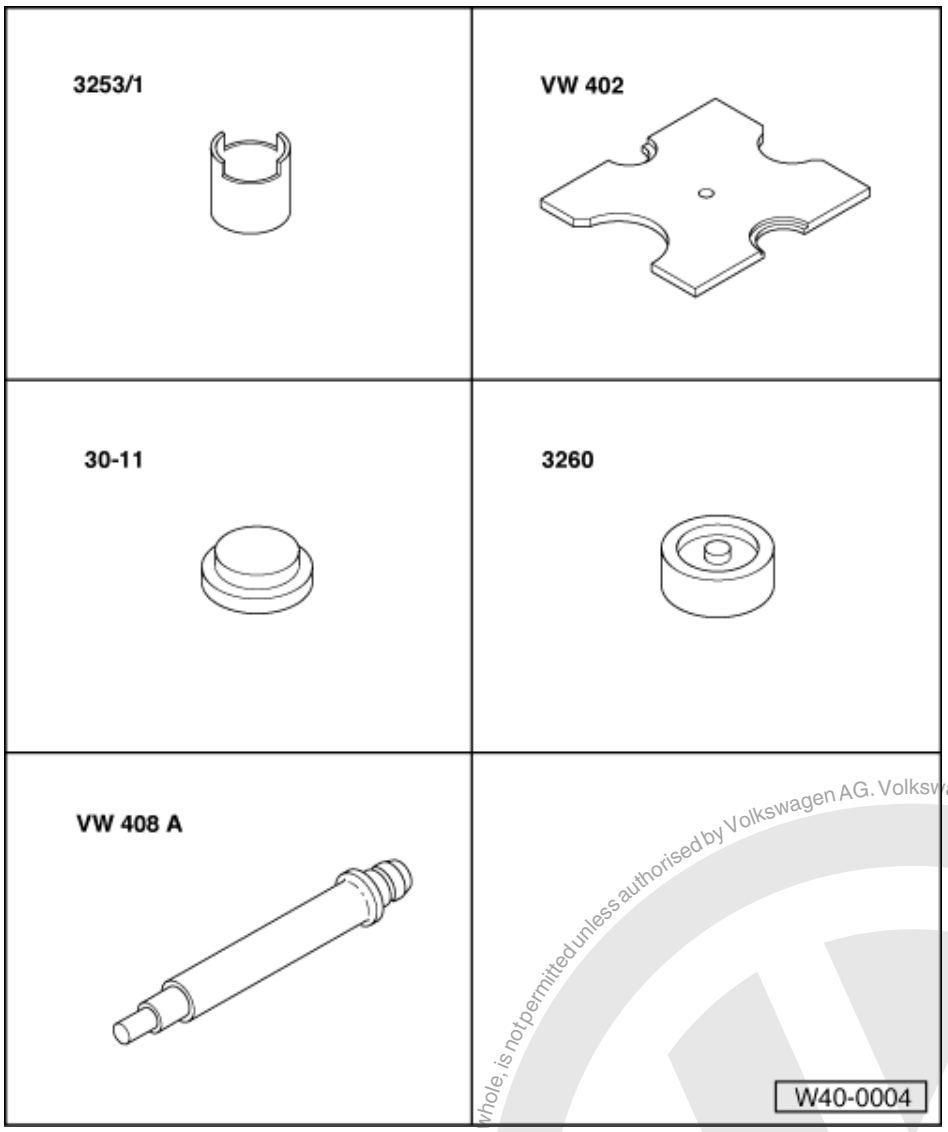

Special tools and workshop equipment required

- 3253/1 Tube
- VW 402 Press piece
- 30-11 Thrust plate
- 3260 Pad
- VW 408 A Press tool

Protected by copyright. Copying for private or commercial purposes, in part or in whole, is not permitted unless authorised by Volkswagen AG. Volkswagen AG does not guarantee or accept any liability with respect to the correctness of information in this document. Copyright by Volkswagen AG.
satelettronica

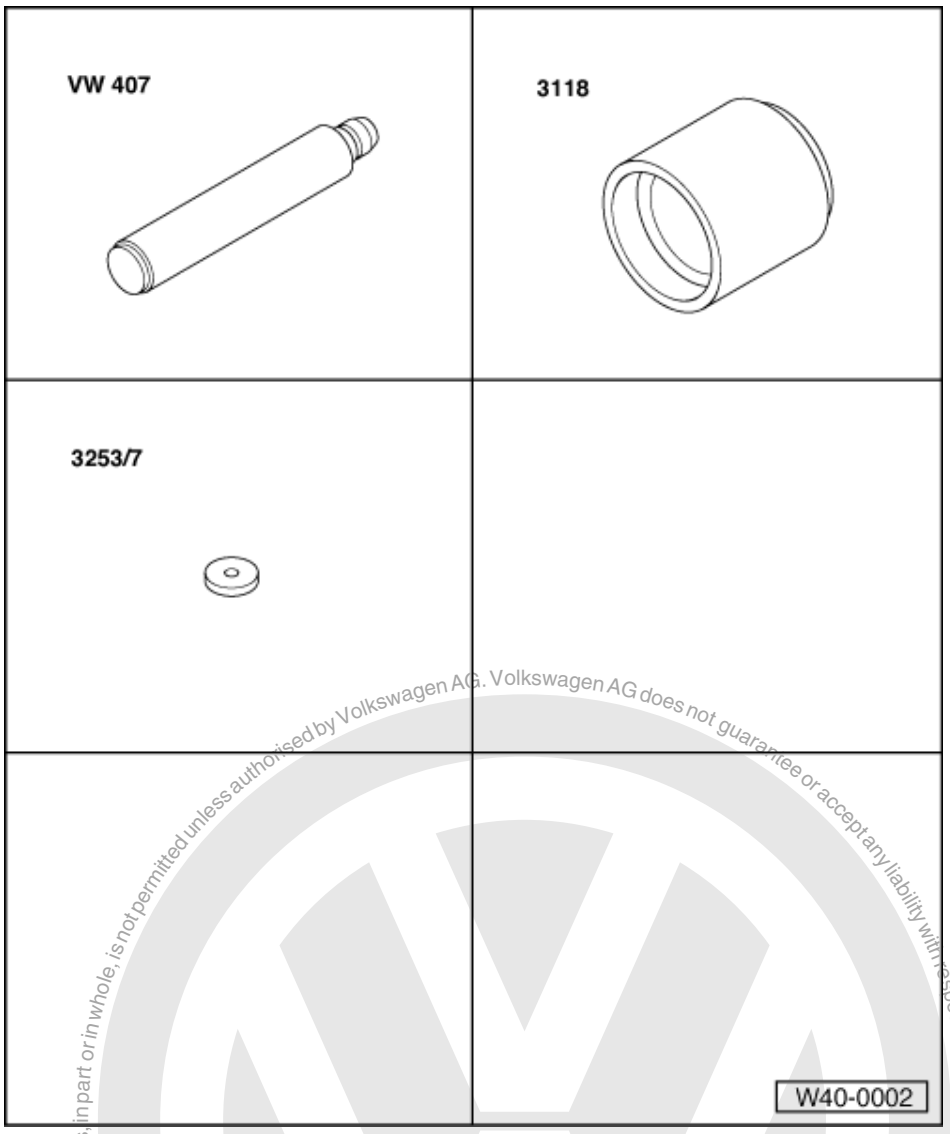

Special tools and workshop equipment required

- VW 407 Press tool
- 3118 Tube
- 3253/7 Disk

Protected by copyright. Copying for private or commercial purposes, in part or in whole, is not permitted unless authorised by Volkswagen AG. Volkswagen AG does not guarantee or accept any liability with respect to the correctness of information in this document. Copyright by Volkswagen AG.
satelettronica

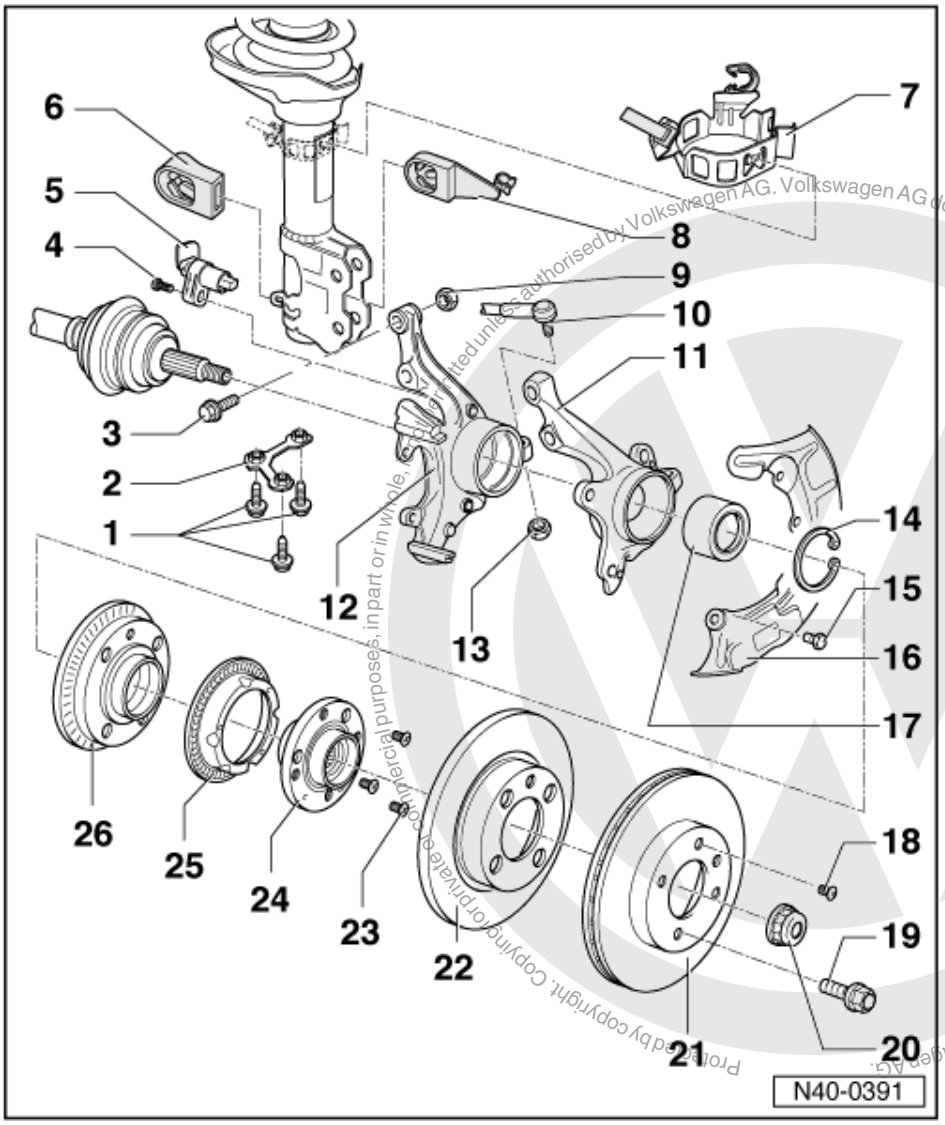

Protected by copyright. Copying for private or commercial purposes, in part or in whole, is not permitted unless authorised by Volkswagen AG. Volkswagen AG does not guarantee or accept any liability with respect to the correctness of information in this document. Copyright by Volkswagen AG.
satelettronica

Notes:

- If a vehicle has to be moved after removing the drive shaft, first install outer joint and tighten to 50 Nm otherwise the wheel bearing will be damaged.
- It is not permitted to carry out welding and straightening operations on load bearing suspension components or those components which locate the wheels.
- Always renew self-locking nuts.
- Always renew corroded nuts/bolts.

1 Hexagon head bolt
- 20 Nm and turn 90° further
- Renew each time after removing
- Mark installation position =>Fig. 1

2 Plate with nuts

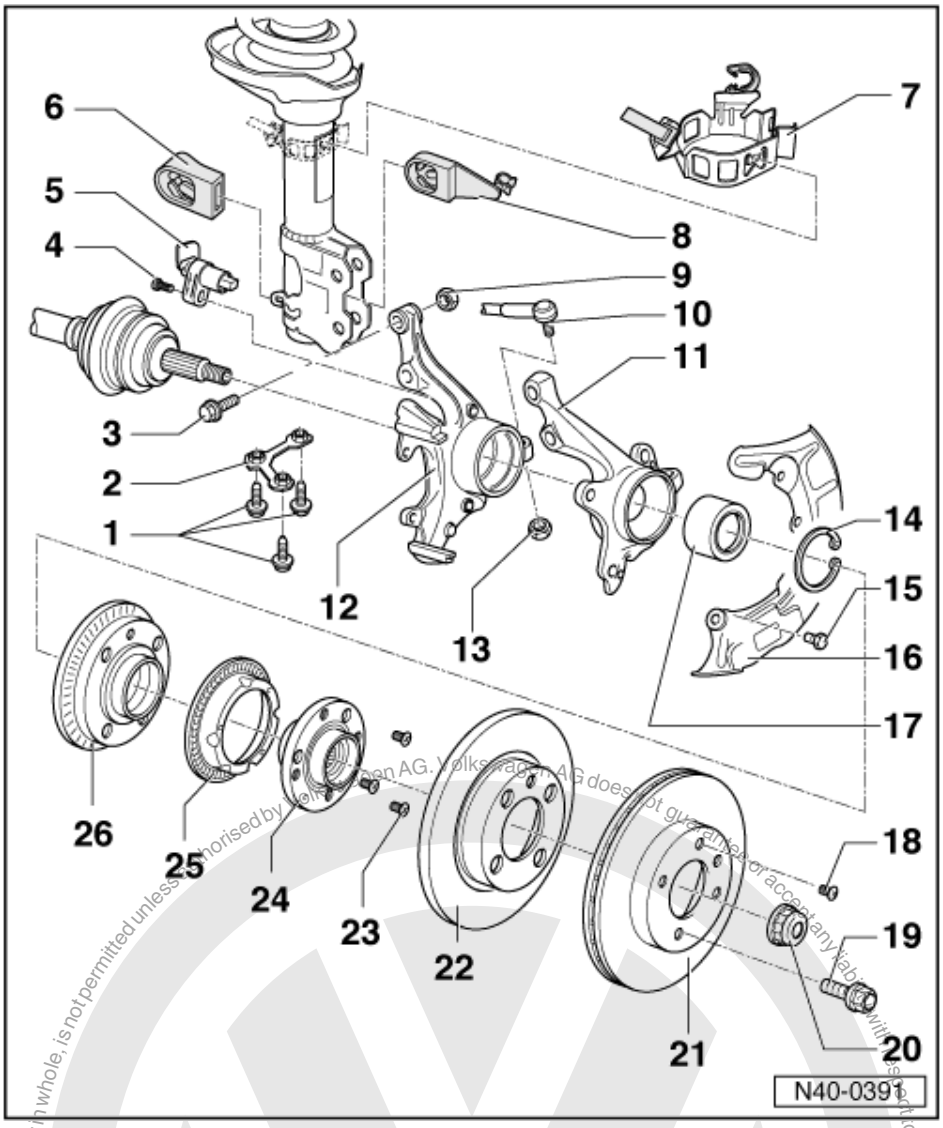

3 Bolt
- Adjusting camber
  => Page 115
- Mark position before loosening

4 Hexagon socket head bolt, 10 Nm

5 Speed sensor

6 Protective cap

7 Bracket

8 Bracket

9 Self-locking nut, 95 Nm
- Renew each time after removing

10 Track rod

Protected by copyright. Copying for private or commercial purposes, in part or in whole, is not permitted unless authorised by Volkswagen AG. Volkswagen AG does not guarantee or accept any liability with respect to the correctness of information in this document. Copyright by Volkswagen AG.

satelettronica

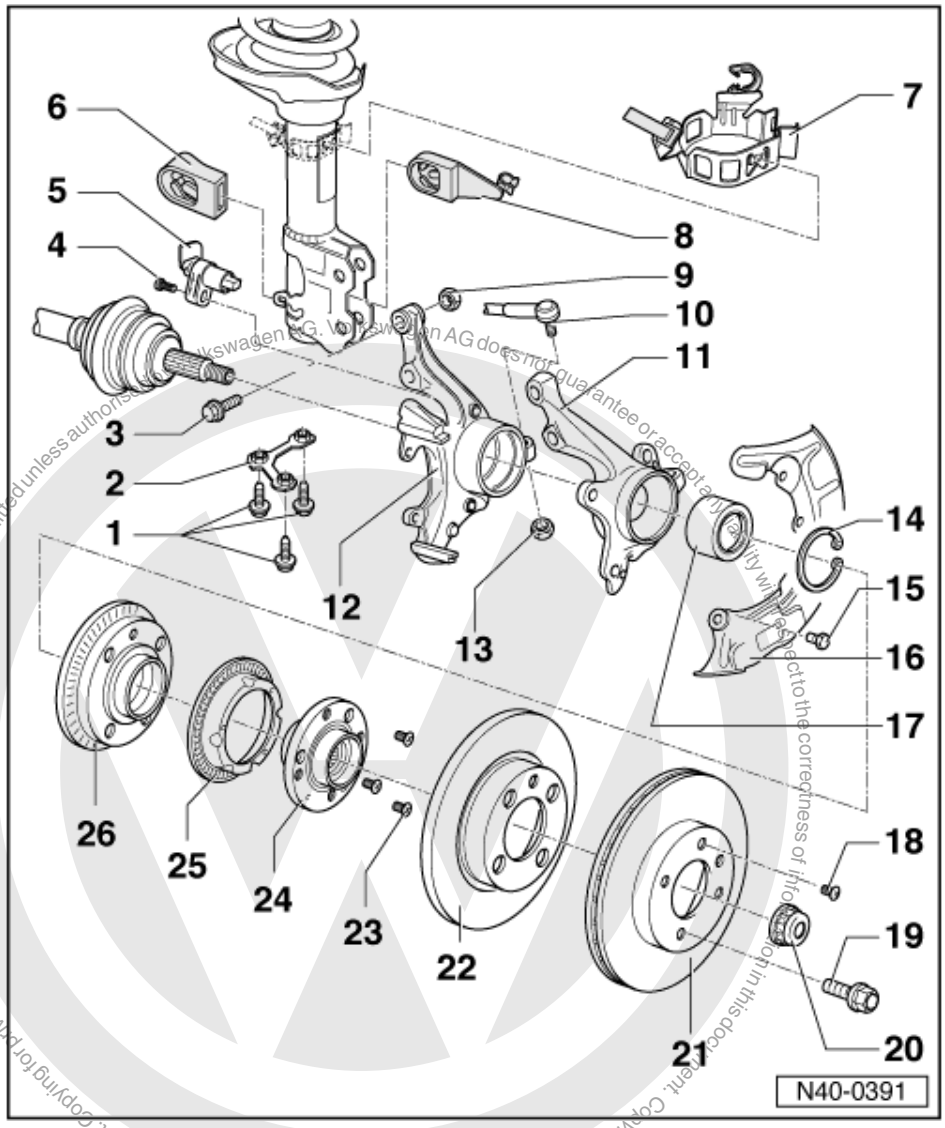

11 Wheel bearing housing

- Coat hole surfaces completely with Molykote grease =>Fig. 5
- Standard with 16V -74 kW vehicles as from 06.96.
  The caster angle does not change with the introduction of this wheel bearing housing.
  With the introduction of the 88 kW GTI the wheel bearing housing was modified which changed the caster angle.
  This, along with a different installation position for the ball joint, increased the caster by 1°.

Allocation of wheel bearing housing
55 kW version for Japan as of vehicle identity No. 6N XY 281179
55 kW with ABS 10.99 ▸
74 kW 16 V
88/92 kW 16 V

satelettronica

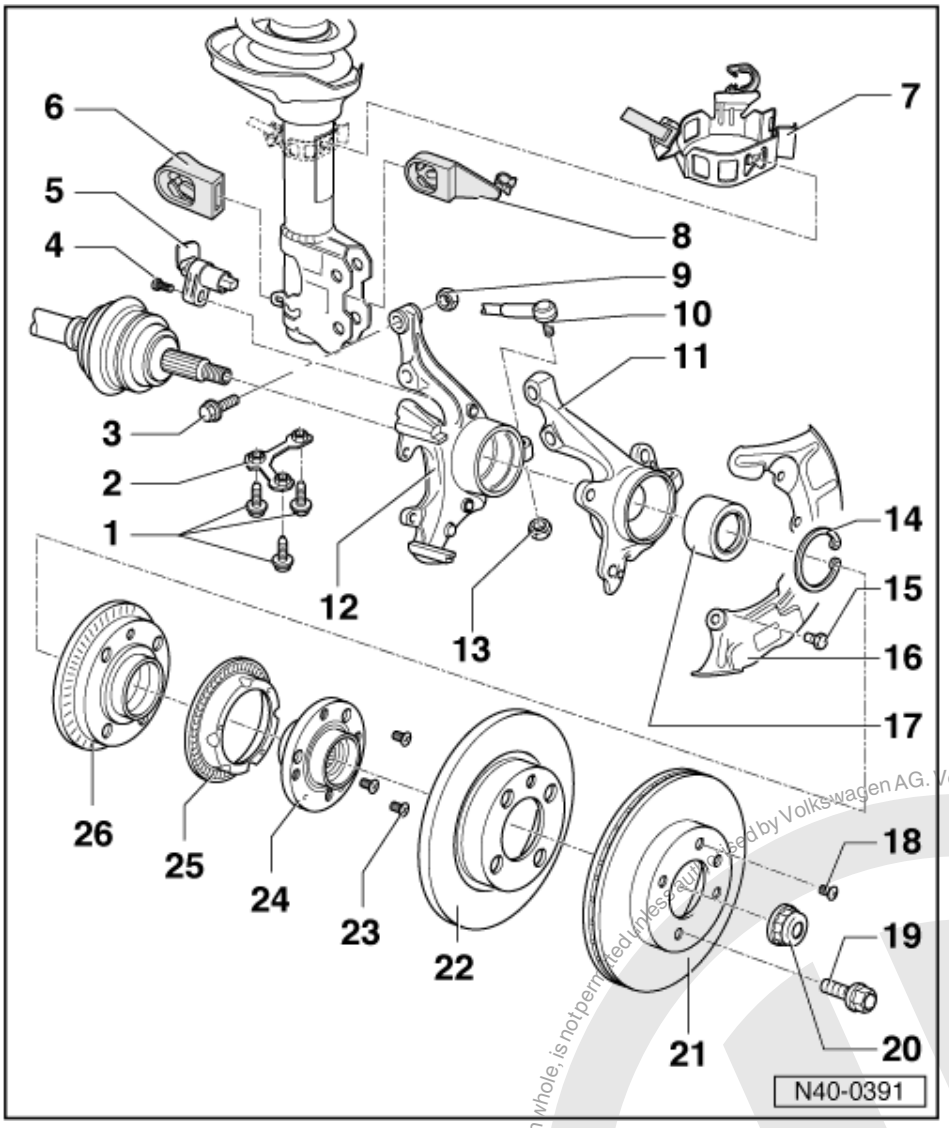

12 Wheel bearing housing

- Coat hole surfaces completely with Molykote grease =>Fig. 5

Allocation of wheel bearing housing according to engine output	
37 kW petrol	44 kW Diesel
44 kW petrol	47 kW Diesel
55 kW with/without ABS ‣ 09.99	55 kW without ABS 10.99 ‣

13 Self-locking nut, 35 Nm

- Splitting ball joint =>Fig. 8
- Renew each time after removing

14 Circlip

- Ensure correctly seated

15 Hexagon bolt, 10 Nm

16 Splash plate

Protected by copyright. Copying for private or commercial purposes, in part or in whole, is not permitted unless authorised by Volkswagen AG. Volkswagen AG does not guarantee or accept any liability with respect to the correctness of information in this document. Copyright by Volkswagen AG.
satelettronica

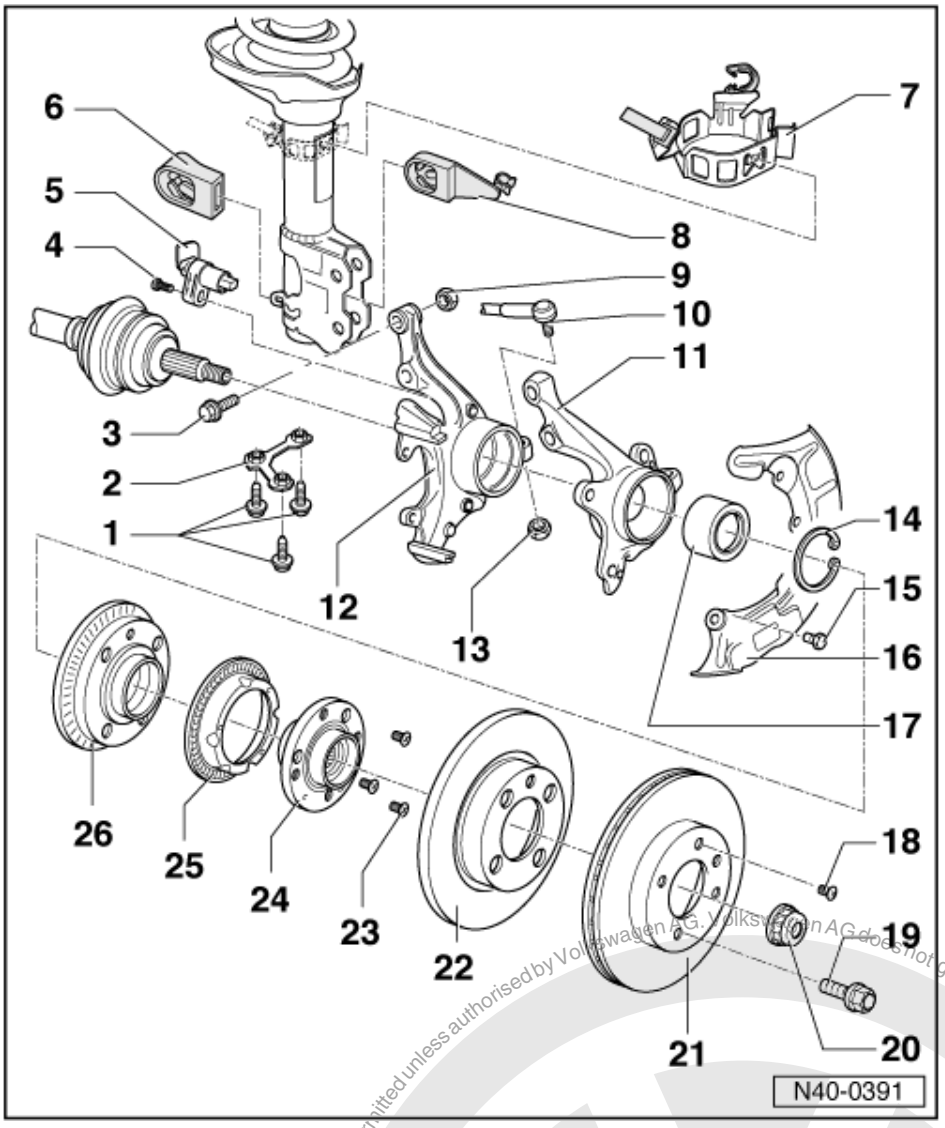

17 Wheel bearing
- Pressing out =>Fig. 4
- Renew, as it is destroyed during pressing out
- Pressing in =>Fig. 6

18 Cross-head screw

19 Wheel bolt, 110 Nm

20 Self-locking 12-point nut
- Tightening =>Page 41
- Renew each time after removing

21 Ventilated brake disc
- For vehicles from 01.95: 239.00 ø
- Brake disc:256.00 mm øfor 16V vehicles

Protected by copyright. Copying for private or commercial purposes, in part or in whole, is not permitted unless authorised by Volkswagen AG. Volkswagen AG does not guarantee or accept any liability with respect to the correctness of information in this document. Copyright by Volkswagen AG.
satelettronica

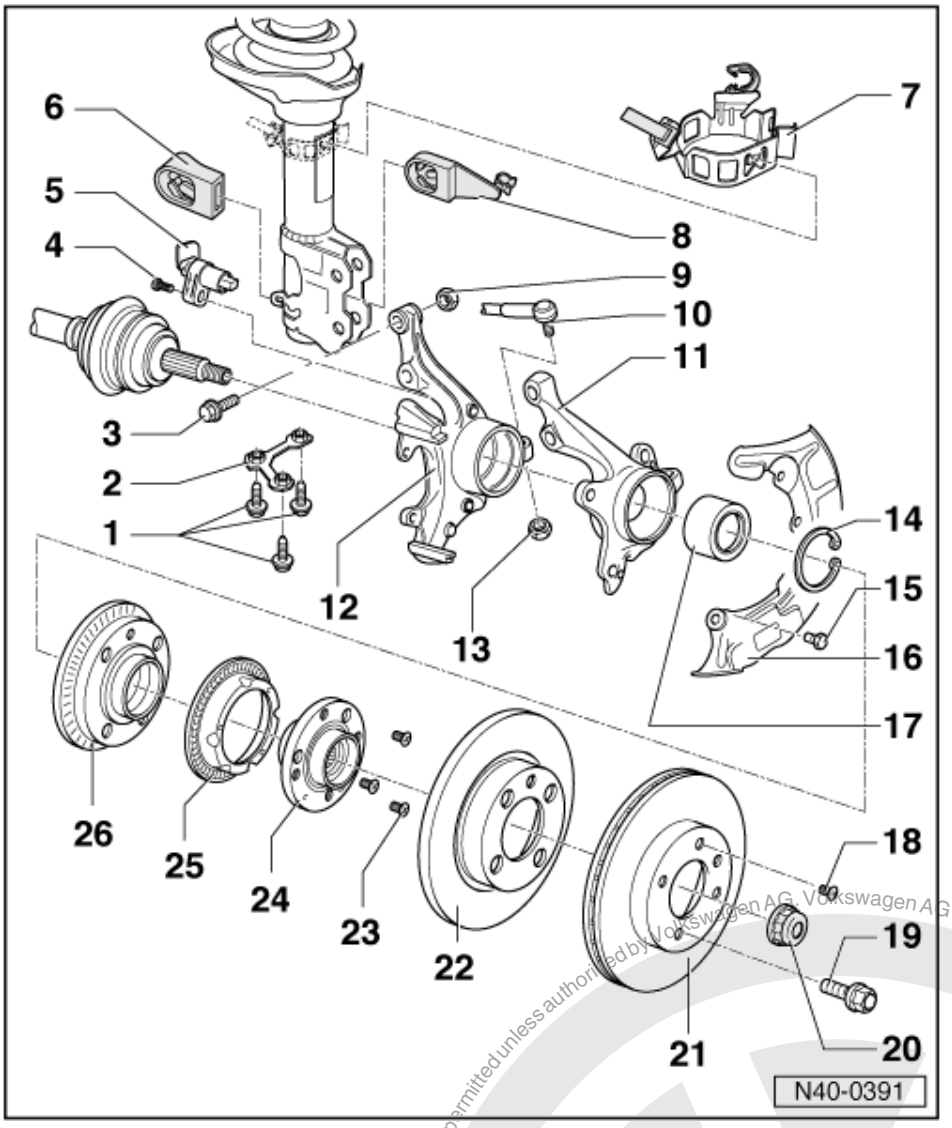

22 Brake disc
- For vehicles up to 12.94

23 Cross-head screw

24 Wheel hub
- Pressing out =>Fig. 2
- Pressing in =>Fig. 7
- Pulling off bearing inner race =>Fig. 3
- Pulling drive shaft out from wheel hub and pressing in =>Removing and installing drive shafts Page 39

25 Speed sensor rotor
- Only on vehicles with ABS

26 Wheel hub with speed sensor rotor
- Rotor is welded to wheel hub

Protected by copyright. Copying for private or commercial purposes, in part or in whole, is not permitted unless authorised by Volkswagen AG. Volkswagen AG does not guarantee or accept any liability with respect to the correctness of information in this document. Copyright by Volkswagen AG.
satelettronica

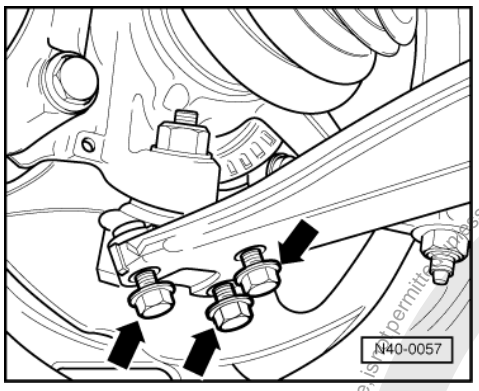

-> Fig.1 Separating ball joint/wishbone connection
- Mark installation position of bolts.
- Remove bolts (arrows).

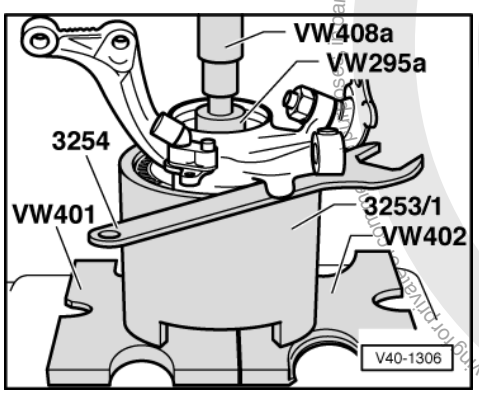

-> Fig.2 Pressing wheel hub out of wheel bearing housing

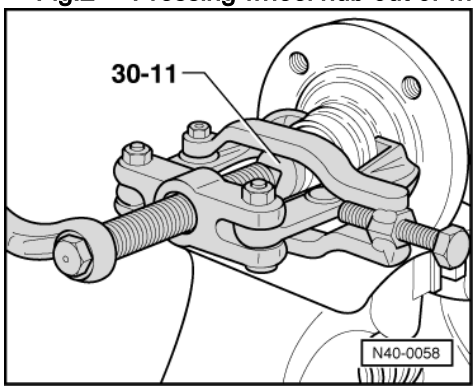

-> Fig.3 Pulling bearing race out of hub

Remove speed sensor rotor if fitted (on vehicles with ABS).
Only use puller with leg clamp e.g. Kukko 204-2 (commercial type).

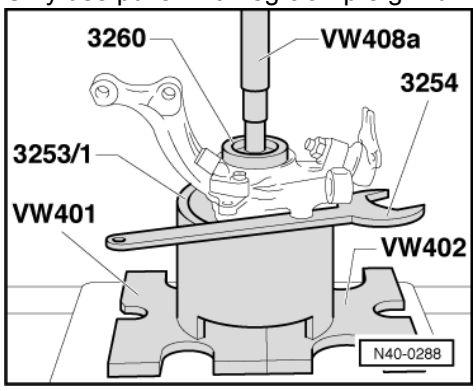

Protected by copyright. Copying for private or commercial purposes, in part or in whole, is not permitted unless authorised by Volkswagen AG. Volkswagen AG does not guarantee or accept any liability with respect to the correctness of information in this document. Copyright by Volkswagen AG.
satelettronica

Protected by copyright. Copying for private or commercial purposes, in part or in whole, is not permitted unless authorised by Volkswagen AG. Volkswagen AG does not guarantee or accept any liability with respect to the correctness of information in this document. Copyright by Volkswagen AG.

-> Fig.4 Pressing wheel bearing out of wheel bearing housing

Fist remove securing ring.

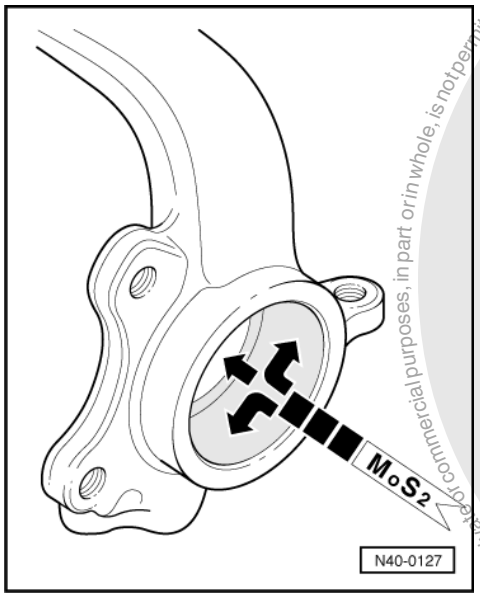

-> Fig.5 Coating hole surface with Molykote grease

Use grease sachet from repair set.

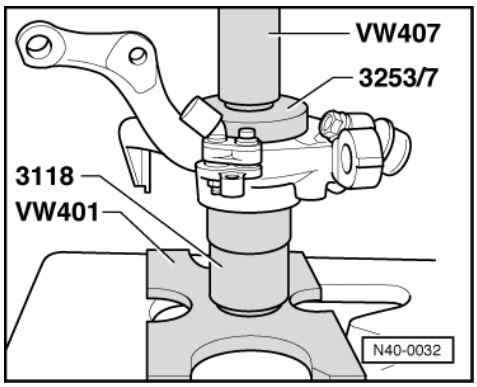

-> Fig.6 Pressing wheel bearing into wheel bearing housing

- Install circlip.

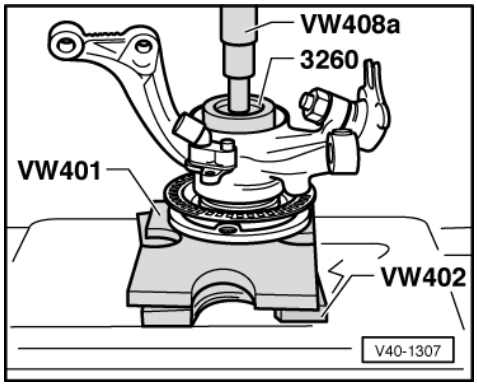

satelettronica

-> Fig.7 Pressing hub into wheel bearing

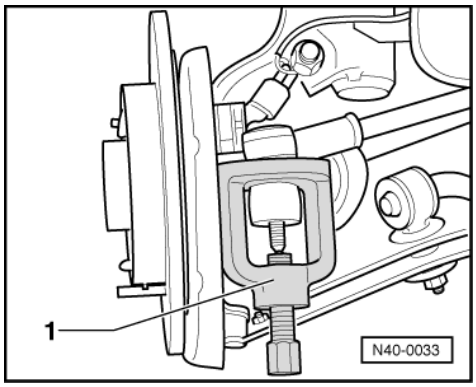

-> Fig.8 Pressing track rod ball joint off steering arm

1 - Ball joint splitter (commercial type) e.g. Kukko No. 128/2

1.12 - Pressing front wheel bearing out and in with wheel bearing housing installed

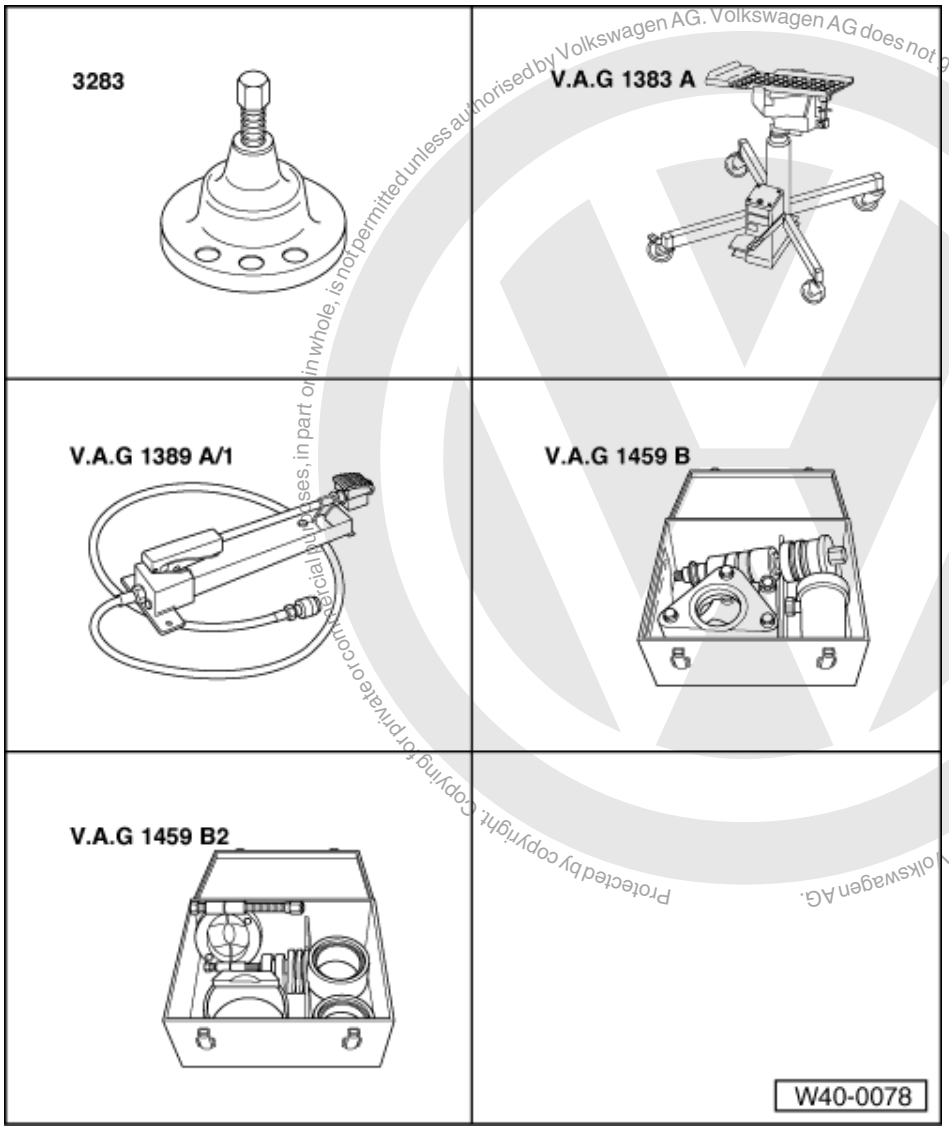

Protected by copyright. Copying for private or commercial purposes, in part or in whole, is not permitted unless authorised by Volkswagen AG. Volkswagen AG does not guarantee or accept any liability with respect to the correctness of information in this document. Copyright by Volkswagen AG.
satelettronica

Special tools and workshop equipment required

- 3283 Press tool
- V.A.G 1383 A Engine/gearbox jack with universal gearbox mounting V.A.G 1359/2
- V.A.G 1389 A/1 Foot pump with high pressure hose

If there is a hand pump V.A.G 1389/1 available in the dealership it can be converted to a foot pump.

To do this use the conversion set V.A.G 1389/3.

- V.A.G 1459 B Hydraulic removal and fitting tool for wheel bearing
- V.A.G 1459 B/2 Supplementary set

Removing

- Lift vehicle until the load on the front axle is relieved.
- Loosen 12-point nut.
- Remove wheel.
- Remove bolts for brake carrier.
- Secure brake caliper to body with wire.
- Remove cross-head screw for brake disc and take off brake disc.

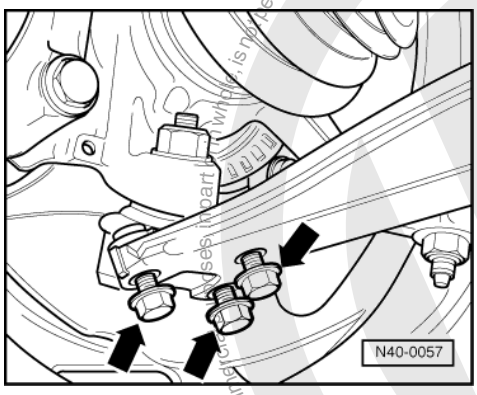

- Remove cover plate.
- Release speed sensor wiring from suspension strut.
- Mark installation position of bolts.
- -> Remove bolts (arrows).

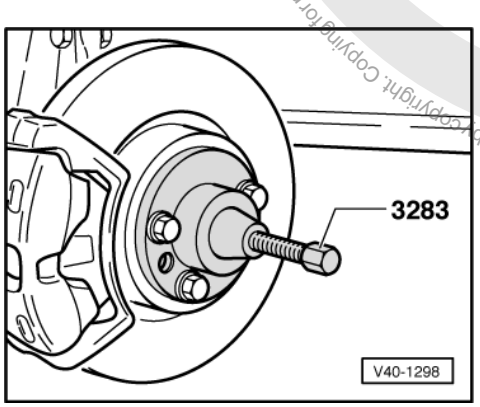

- -> Press drive shaft out.

- When pressing drive shaft out ensure sufficient clearance is available.

- Pull wheel bearing housing with swivel joint out from wishbone.
- Remove drive shaft from wheel bearing housing and tie up.
- Remove tool 3283.

Protected by copyright. Copyright by Volkswagen AG.
Copying for private or commercial purposes, in part or in whole, is not permitted unless authorised by Volkswagen AG. Volkswagen AG does not guarantee or accept any liability with respect to the correctness of information in this document.
satelettronica

Pulling out hub

Place gearbox jack V.A.G 1383/A underneath (danger of accident from falling parts when pulling out the wheel hub and the wheel bearing).

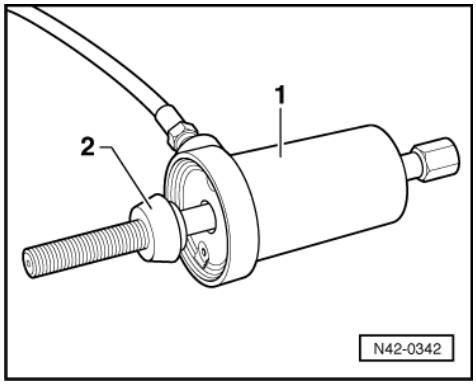

- -> Fit centralizing part with clip E-76-2.

1 - Hollow piston cylinder HKZ-15
2 - Centralizing part with clip E-76-2

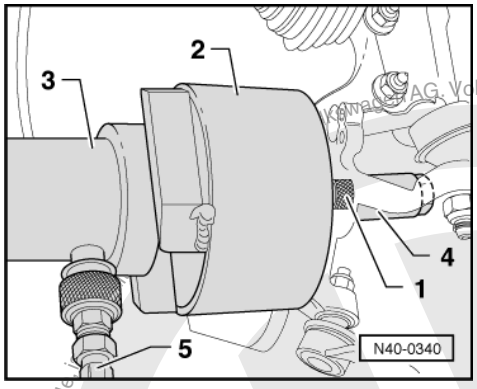

- -> Insert press bolt -1- into wheel bearing housing.
- Fit support -2-, hollow piston cylinder -3- with pull rod and special nut -4-.
- Operate pump and pull out the wheel bearing.

1 - Press bolt E 38
2 - Support E-40
3 - Hollow piston cylinder HKZ-15
4 - Special nut E-8-214 and pull rod
5 - High pressure hose with quick release coupling

Pulling out wheel bearing

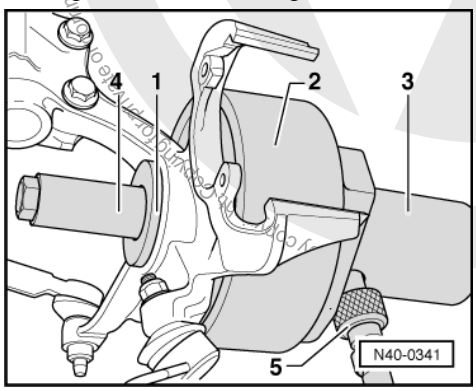

- Remove circlip.
- -> Set up thrust piece -1- with collar facing wheel bearing, press sleeve -2- with four internal stepped diameters towards wheel bearing housing and hollow piston cylinder -3- with pull rod and special nut -4-.

satelettronica

- Operate pump and pull out the wheel bearing.

  1 - Thrust piece E-3
  2 - Support E-40
  3 - Hollow piston cylinder HKZ-15
  4 - Special nut E-8-214 and pull rod

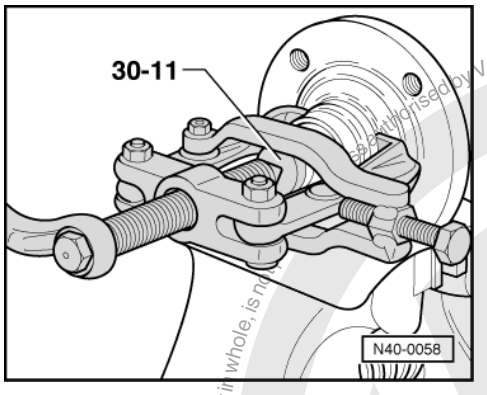

-> Pulling inner race off hub

Remove speed sensor rotor if fitted (on vehicles with ABS).

Only use puller with leg clamp e.g. Kukko 204-2 (commercial type).

Pressing in wheel bearing

- Grease total area of wheel bearing housing bores with Molykote grease Part No. N05272300.

Use grease sachet from repair set.

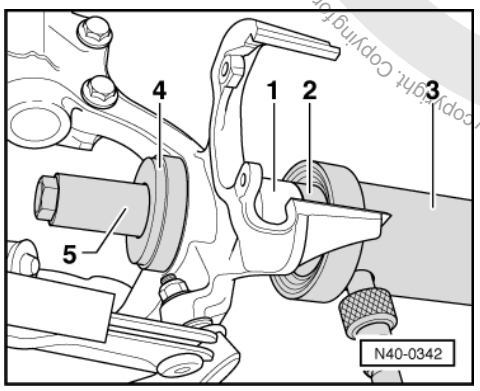

- -> Fit wheel bearing -1-, press piece -2- (fit with collar in bearing) and hollow piston cylinder -3- with pull rod on wheel bearing housing.
- Fit thrust piece -4- with collar to wheel bearing housing and special nut -5- from inside.
- Press wheel bearing in by operating the pump.
- Insert circlip with long nose pliers.

  1 - Wheel bearing
  2 - Thrust piece E-7
  3 - Hollow piston cylinder HKZ-15
  4 - Thrust piece E-45
  5 - Special nut E-8-214 and pull rod

Protected by copyright. Copying for private or commercial purpose, in part or in whole, is not permitted unless authorised by Volkswagen AG. Volkswagen AG does not guarantee or accept any liability with respect to the correctness of information in this document. Copyright by Volkswagen AG.
satelettronica

Protected by copyright. Copying for private or commercial purposes, in whole, is not permitted unless authorised by Volkswagen AG. Volkswagen AG does not guarantee or accept any liability with respect to the correctness of information in this document. Copyright by Volkswagen AG.

Pressing in wheel hub

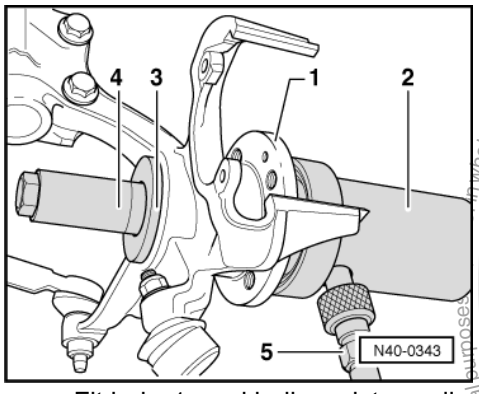

- -> Fit hub -1- and hollow piston cylinder -2- with pull rod on wheel bearing.
- Fit special nut -4- and thrust piece -3- with collar from inside to wheel bearing.
- Press in hub by operating the pump.

1 - Hub
2 - Hollow piston cylinder HKZ-15
3 - Thrust piece E-3
4 - Special nut E-8-214 and pull rod

Further assembly work is carried out in the reverse order.

1.13 - Removing and installing drive shafts

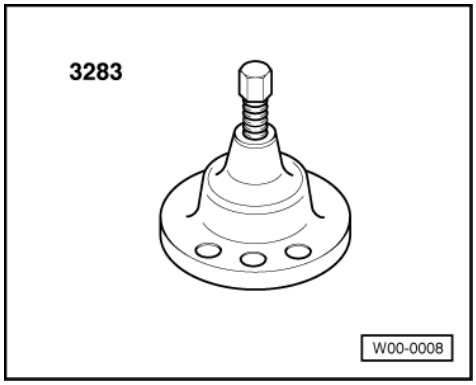

Special tools and workshop equipment required

- Press
- Angle wrench V.A.G 1756

As from the introduction of the Polo, from 10.94, the wheel hub has been modified and is different to all previous vehicles.

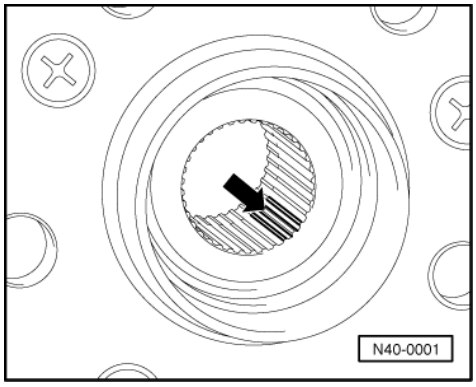

satelettronica

-> The peaks of the splines (arrow) are compressed slightly. This means that there is now no longer any backlash between the splines of the outer joint and wheel hub.
Assembling the drive shaft in the wheel hub is no longer possible without tools.
This new process requires a new method of tightening the 12-point nut.
Removing
The wheel bearings must not be loaded when the 12-point nuts are loose.
If the bearings are loaded by the vehicles own weight, the wheel bearings will be stressed and the life expectancy reduced.
If a vehicle has to be moved after removing the drive shaft, first install an outer joint and tighten to 50 Nm instead of the drive shaft, otherwise the wheel bearing will be damaged.
- Lift vehicle until the load on the front axle is relieved.

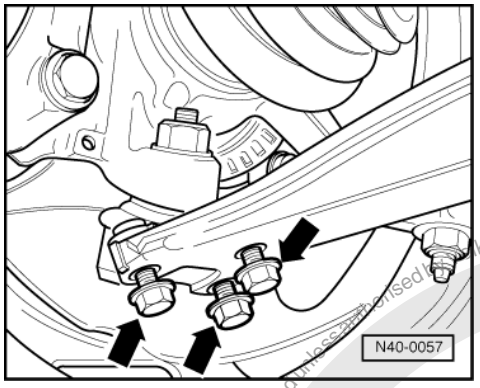

- Loosen 12-point nut.
- Remove air deflector plate on wishbone.
- Disconnect drive shaft from gearbox drive flange.
- Mark installation position of bolts.
- -> Remove bolts (arrows).

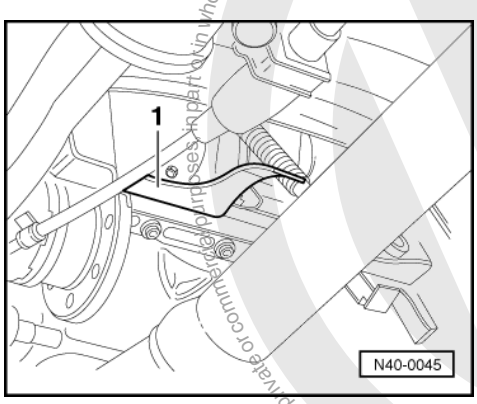

- -> If the right-hand drive shaft is also to be removed then additionally remove retainer -1- for Lambda probe cable.

For ease of illustration the illustration shows retainer -1- without drive shaft.
The retainer is only fitted to vehicles with a three-way catalyst.

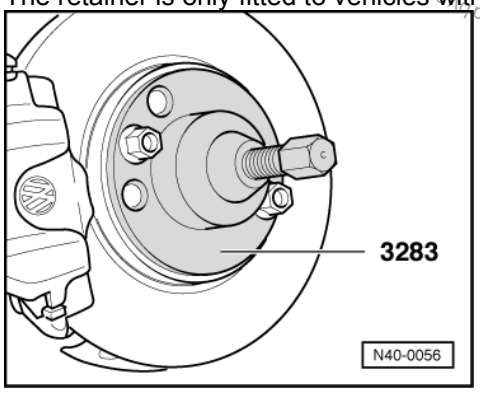

Protected by copyright. Copyright by Volkswagen AG.
Volkswagen AG. Volkswagen AG does not guarantee or accept any liability with respect to the correctness of information in this document. Copyright by Volkswagen AG.
satelettronica

- -> Press drive shaft out.

Note:

◆ When pressing drive shaft out ensure sufficient clearance is available.

- Take out drive shaft.

Installing

Remove any paint residue and/or corrosion on thread/splines of the outer joint.

- Fit drive shaft.
- Guide outer joint into wheel hub splines as far as possible.

  Coat contact surface of twelve-point nut with oil and screw on as far as possible.

- Pull outer joint into the wheel hub until the outer joint is in position.
- Connect lower swivel joint to wishbone (20 Nm + 90°) bolts on old marks.
- Fit inner joint and tighten bolts to 45 Nm.
- Install air deflector plate on wishbone.
- Install retainer for Lambda probe cable and clip cable into retainer (only for right-hand drive shaft).
- Tighten 12-point nut to 200 Nm and then loosen one turn.

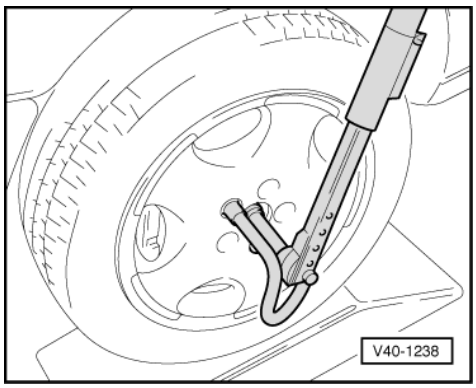

- -> Tighten 12-point nut.

Tightening torque:

50 Nm + turn 45°further

◆ To tighten 12-point nut we recommend the angle measuring wrench V.A.G 1756.

If an angle measuring wrench is not available then tighten 12-point nut using following method.

- Lower vehicle until the wheels touch ground.

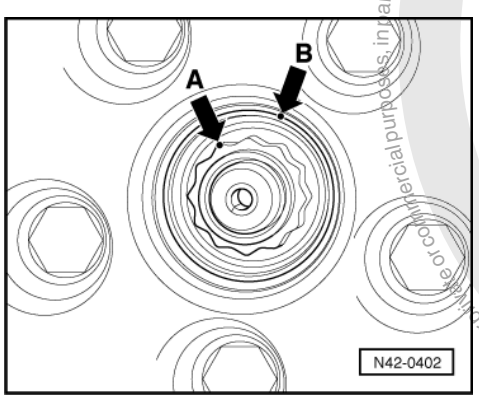

satelettronica
Protected by copyright. Copying for private or commercial purposes, in part or in whole, is not permitted unless authorised by Volkswagen AG. Volkswagen AG does not guarantee or accept any liability with respect to the correctness of information in this document. Copyright by Volkswagen AG.

- Tighten 12-point nut to 200 Nm and then loosen one turn.
- Tighten 12-point nut to 50 Nm.
- -> Mark one of the 12-points on the nut with a line -arrow A-.
- Mark a 2nd line (arrow B) on the edge of the wheel hub above the next 12-point.
- Turn 12-point nut further until both lines align.

1.14 - Servicing front suspension strut>09.99

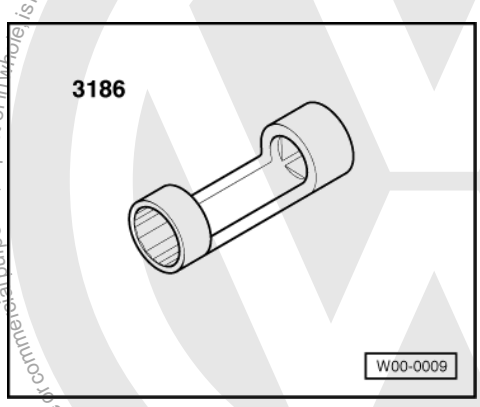

Special tools and workshop equipment required

- 3186 Special socket 21 mm AF

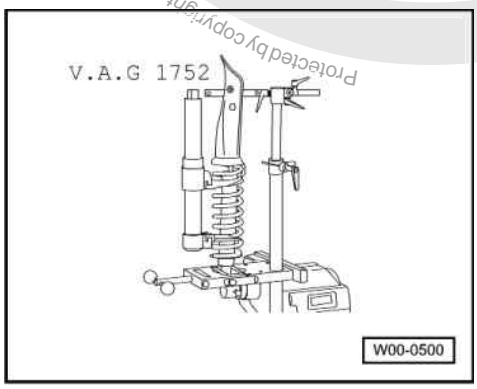

- V.A.G 1752/1 Suspension strut tensioner
- V.A.G 1752/4 Spring retainer

Protected by copyright. Copying for private or commercial purposes, in part or in whole, is not permitted unless authorised by Volkswagen AG. Volkswagen AG does not guarantee or accept any liability with respect to the correctness of information in this document. Copyright by Volkswagen AG.
satelettronica

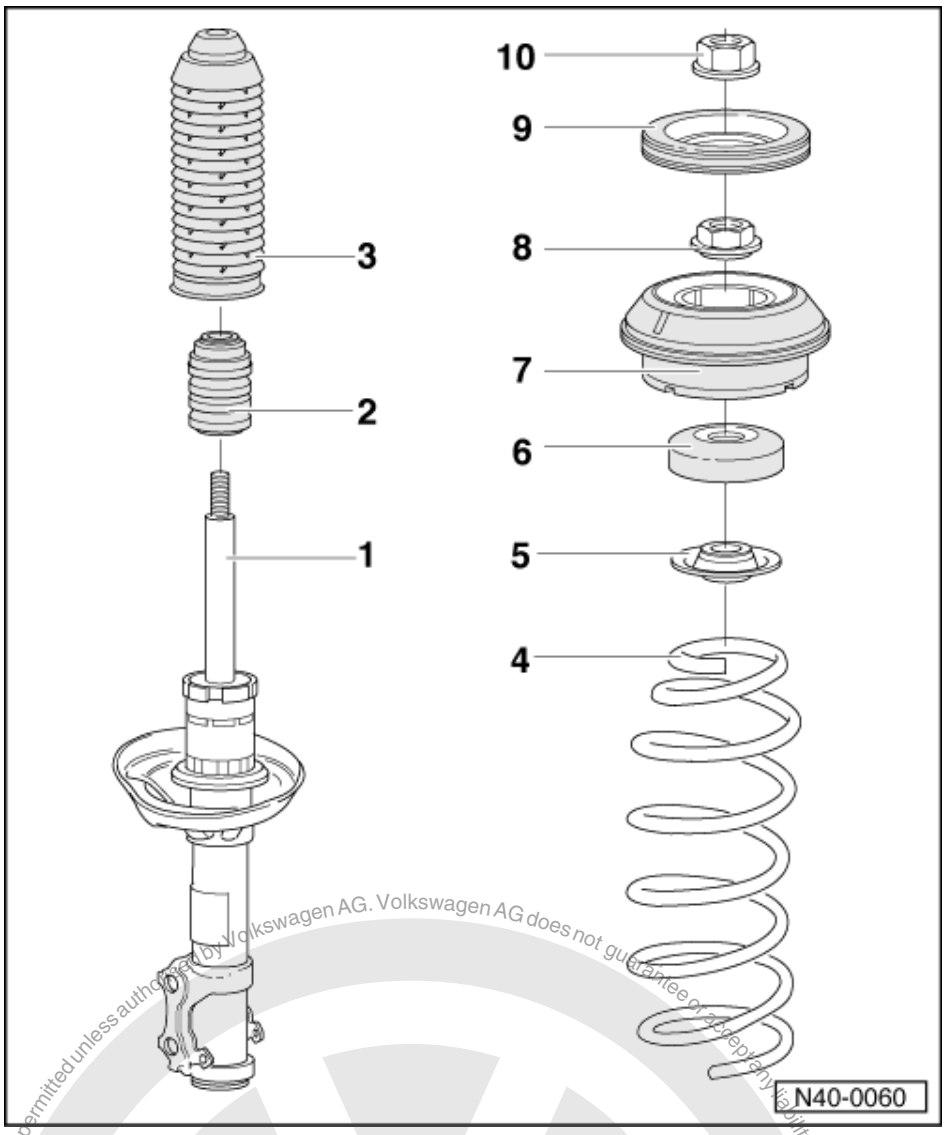

1 Shock absorber
- Can be renewed individually
- Disposal

=> Special Information Running gear No. 2

- Checking shock absorber for leaks and noises

=> Special Information Running gear No. 17

- After renewing set camber and track

2 Buffer stop
3 Protective sleeve
4 Coil spring
- Removing and installing =>Fig. 2
- Observe colour coding
- Outer surface of spring must not be damaged

Protected by copyright. Copyright by Volkswagen AG. Volkswagen AG does not guarantee or accept any liability with respect to the correctness of information in this document. Copyright by Volkswagen AG. Unauthorized copying or publication for commercial purposes, in part or in whole, is not permitted unless authorized by Volkswagen AG.
satelettronica

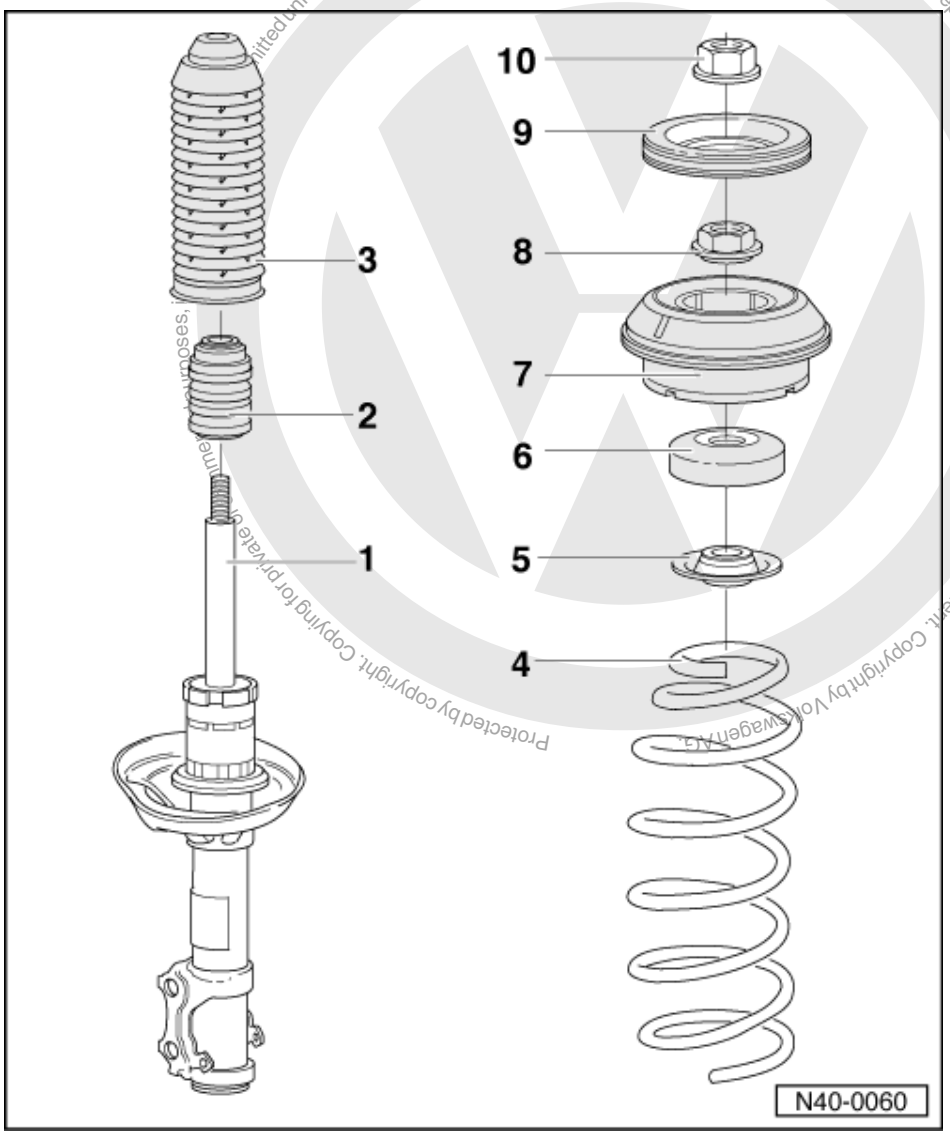

5 Spring plate
6 Axial ball bearing
7 Suspension strut mounting
8 Hexagon nut, 60 Nm
- Loosening and tightening
  =>Fig. 3

9 Stop
10 Self-locking nut, 60 Nm
- Loosening and tightening
  =>Fig. 1
- Renew each time after removing

Protected by copyright. Copying for private and commercial purposes, is not permitted unless authorised by Volkswagen AG. Volkswagen AG does not guarantee or accept any liability with respect to the correctness of information in this document. Copyright by Volkswagen AG.
satelettronica

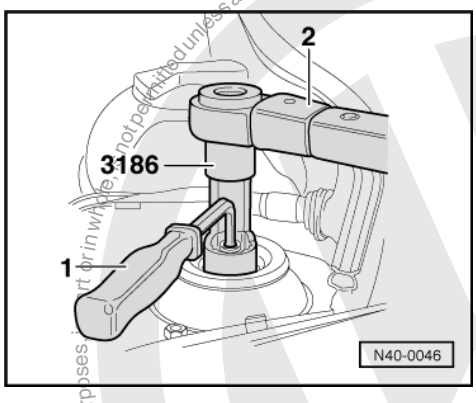

-> Fig.1 Loosening and tightening hexagon nut

1 - Hexagon key, 7 mm AF (commercially available)
2 - V.A.G 1332

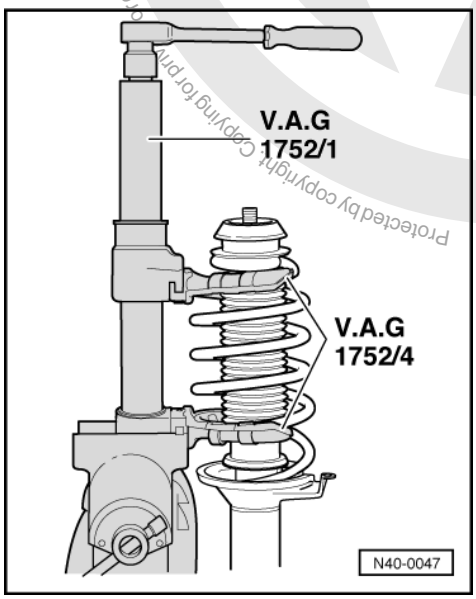

-> Fig.2 Removing and installing spring with spring clamping device V.A.G 1752/1

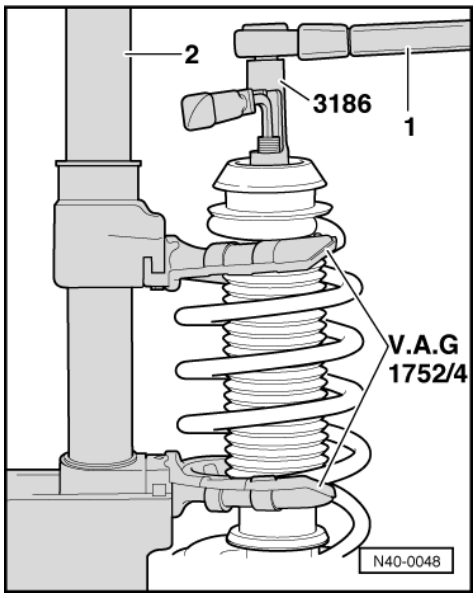

Protected by copyright. Copying for private or commercial purposes, in part or in whole, is not permitted unless authorised by Volkswagen AG. Volkswagen AG does not guarantee or accept any liability with respect to the correctness of information in this document. Copyright by Volkswagen AG.
satelettronica

-> Fig.3 Removing and installing nut for upper spring plate

1 - V.A.G 1332
2 - V.A.G 1752/1

1.15 - Servicing front suspension strut 10.99>

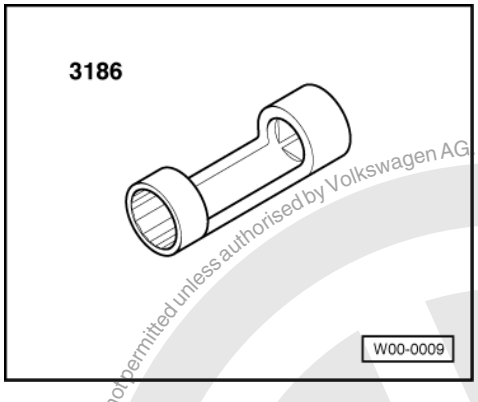

Special tools and workshop equipment required

- 3186 Special socket 21 mm AF

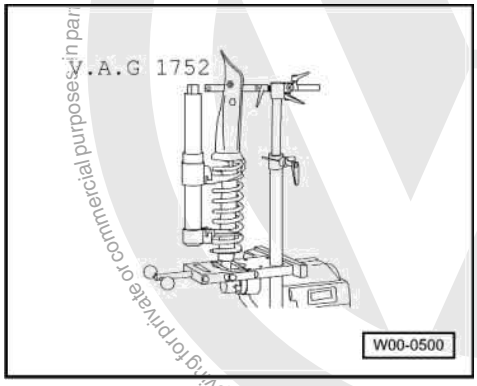

- V.A.G 1752/1 Suspension strut tensioner
- V.A.G 1752/4 Spring retainer

Protected by copyright. Copying for private or commercial purposes, in part or in whole, is not permitted unless authorised by Volkswagen AG. Volkswagen AG does not guarantee or accept any liability with respect to the correctness of information in this document. Copyright by Volkswagen AG.
satelettronica

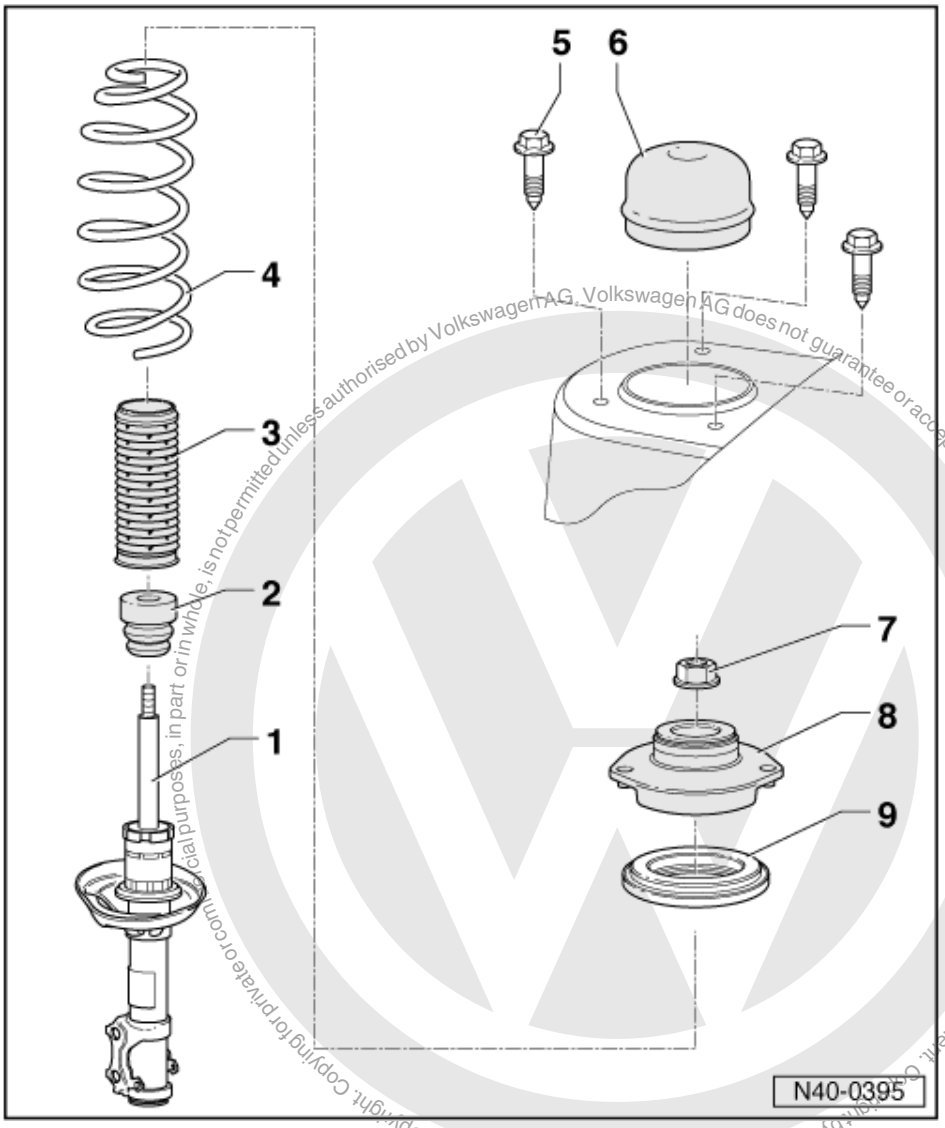

1 Shock absorber
- Can be renewed individually
- Disposal

=> Special Information Running gear No. 2

- Checking shock absorber for leaks and noises

=> Special Information Running gear No. 17

- After renewing set camber and track

2 Buffer stop
3 Protective sleeve
4 Coil spring
- Removing and installing =>Fig. 2
- Observe colour coding
- Outer surface of spring must not be damaged

Protected by copyright. Copying for private or commercial purposes, in part or in whole, is not permitted unless authorised by Volkswagen AG. Volkswagen AG does not guarantee or accept any liability with respect to the correctness of information in this document. Copyright by Volkswagen AG.
satelettronica

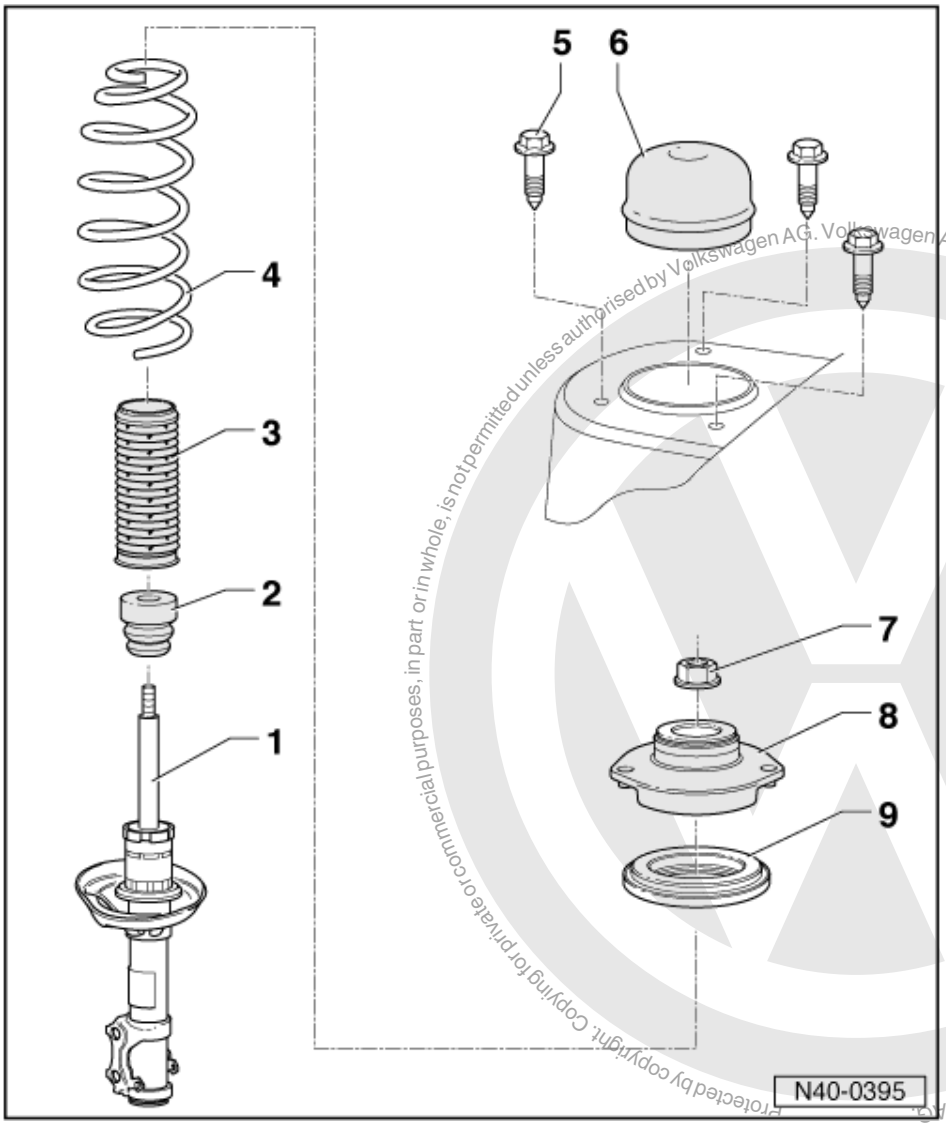

Protected by copyright. Copying for private or commercial purposes, in part or in whole, is not permitted unless authorised by Volkswagen AG. Volkswagen AG does not guarantee or accept any liability with respect to the correctness of information in this document. Copyright by Volkswagen AG.

satelettronica

5 Hexagon head bolt
- 15 Nm and turn 180° further
- Renew each time after removing

6 Cap

7 Hexagon nut, 60 Nm
- Loosening and tightening
  =>Fig. 3

8 Suspension strut mounting
- Loosening and tightening
  =>Fig. 1

9 Axial ball bearing

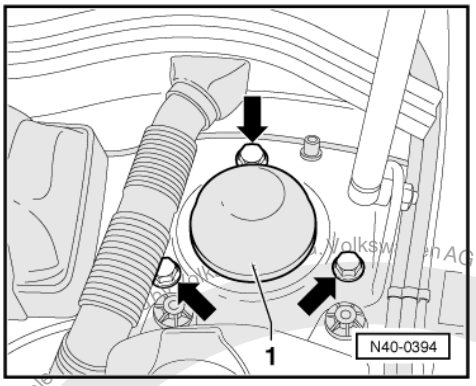

-> Fig.1 Loosening and tightening suspension strut mounting

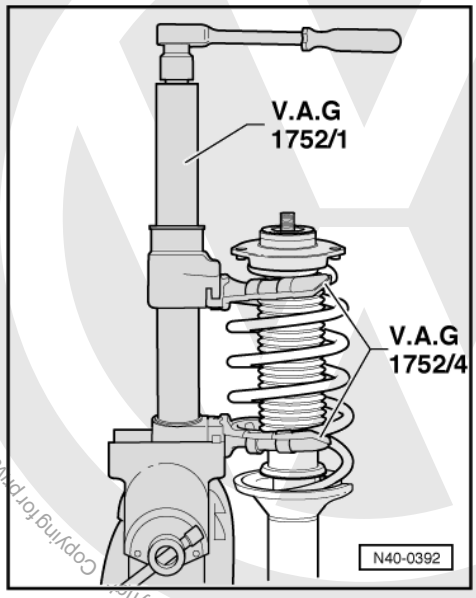

-> Fig.2 Removing and installing spring with spring clamping device V.A.G 1752/1

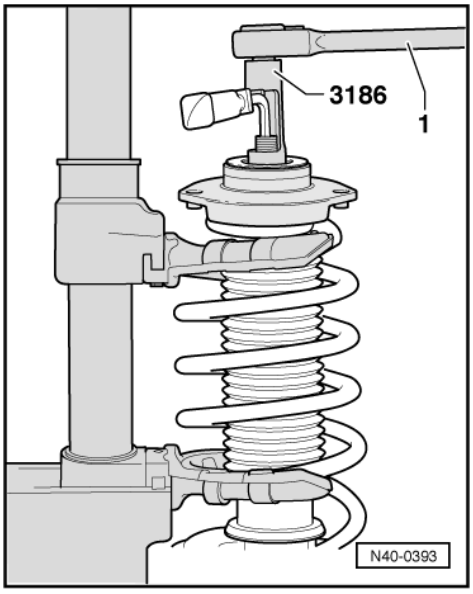

satelettronica

-> Fig.3 Loosening and tightening nut for suspension strut mounting

1 - V.A.G 1332

2 - Servicing drive shaft

2.1 - Servicing drive shaft

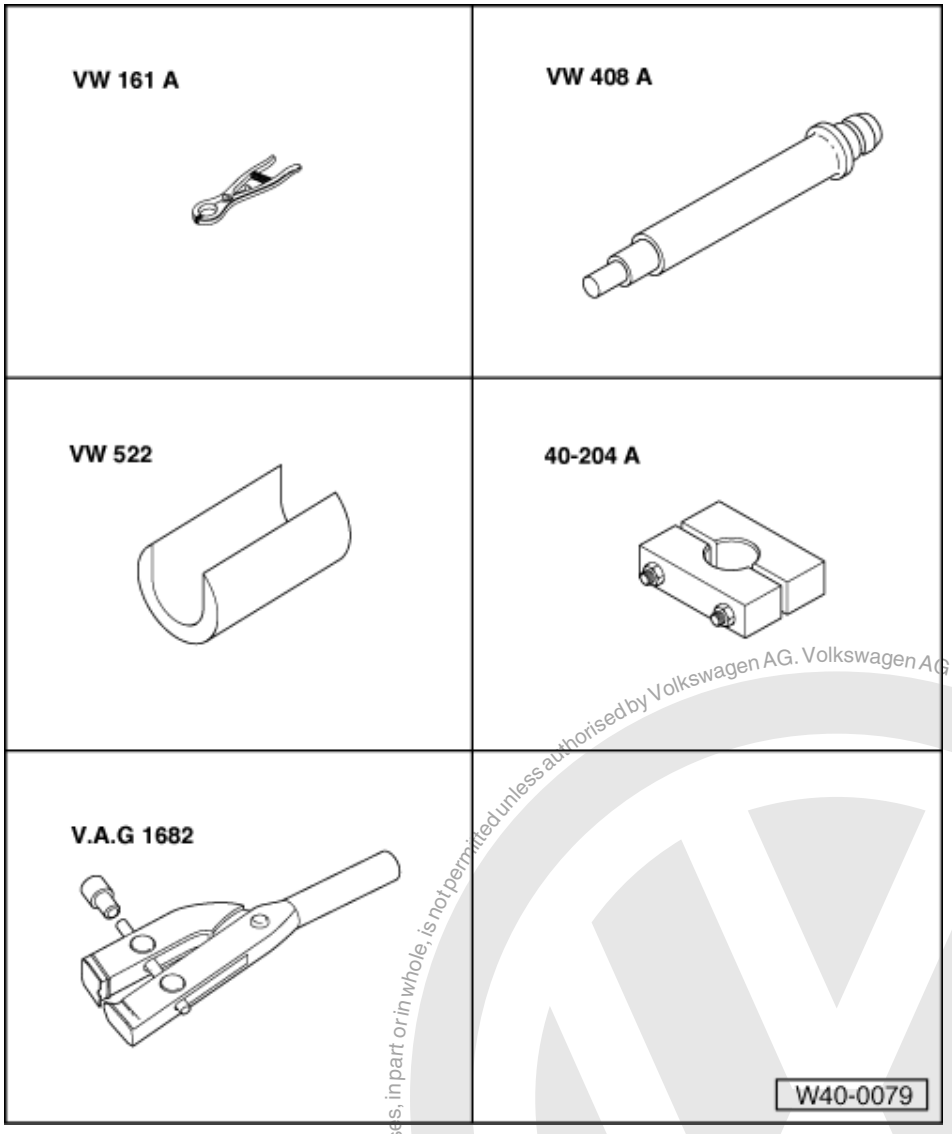

2.2 - Servicing drive shaft with constant velocity joint

Special tools and workshop equipment required

- VW 161 A Circlip pliers
- VW 408 A Press tool
- VW 522 Support sleeve
- 40-204 A Tensioner
- V.A.G 1682 Clamp

Protected by copyright. Copying for private or commercial purposes, in part or in whole, is not permitted unless authorised by Volkswagen AG. Volkswagen AG does not guarantee or accept any liability with respect to the correctness of information in this document. Copyright by Volkswagen AG.
satelettronica

Greasing joints
- Grease quantity: Outer and inner constant velocity joint, 90 grammes each of G 000 603.
- Greasing outer joint: press half of the grease into the joint, and the other half evenly into the bellows.
- Greasing inner joint: press half of the grease into the inner joint from both sides, the other half evenly into the bellows.
- When renewing the bellows grease joint as required.

2.3 - Assembly overview drive shaft with constant velocity joint

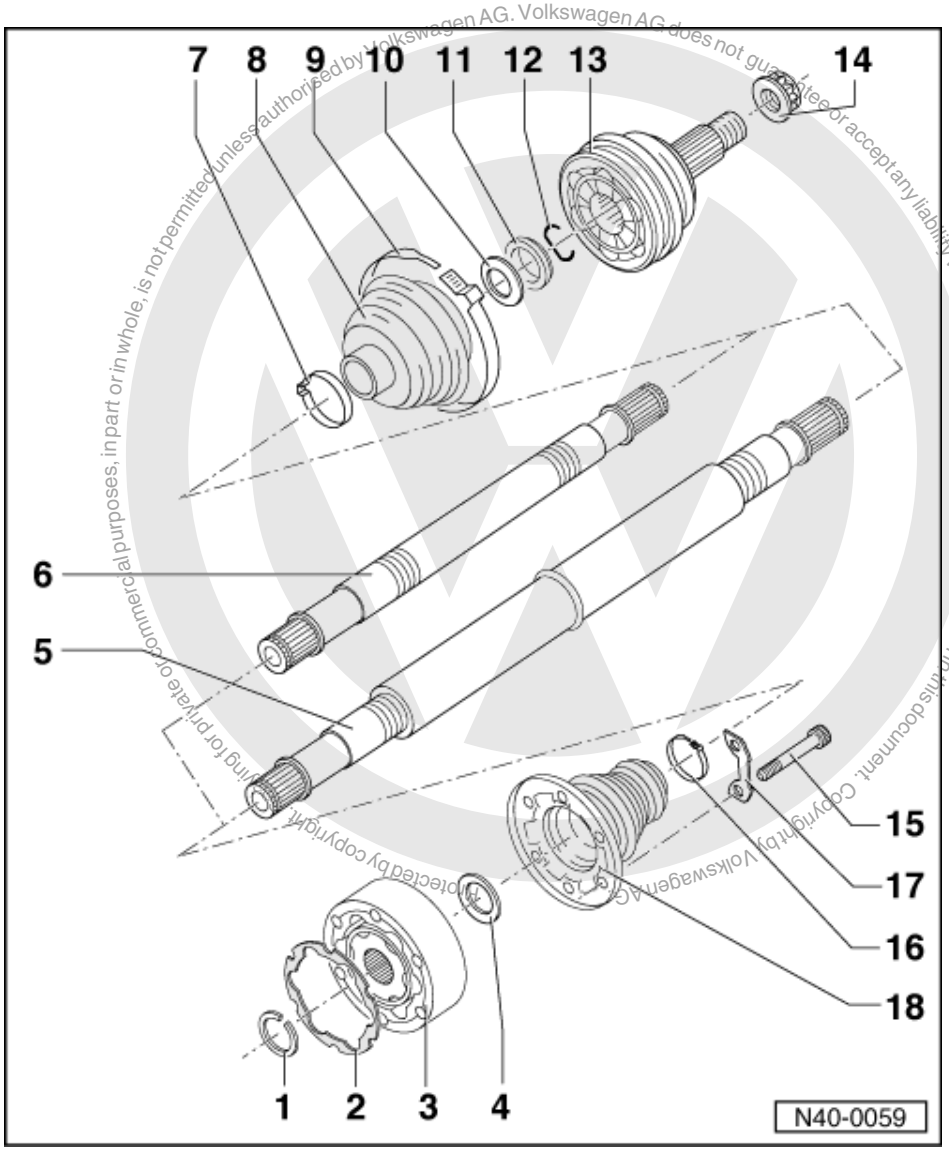

Volkswagen AG. Volkswagen AG does not guarantee or accept any liability with respect to the correctness of information in this document. Copyright by Volkswagen AG. Protected by copyright. Commercial purposes, in part or in whole, is not permitted unless authorised by Volkswagen AG for private or commercial purposes, in part or in whole, is not permitted unless authorised by Volkswagen AG.

1 Circlip
- Renew
- Remove and install with VW 161 a

2 Gasket
- Renewing. Pull off protective foil and stick onto joint.

3 Inner constant velocity joint
- Only renew complete
- Pressing off => Fig. 2
- Pressing on => Fig. 3
- Greasing => Page 51
- Checking => Page 60

4 Dished washer

satelettronica

- Inner øsplined
- Installation position: outer ø(concave side) contacts constant velocity joint

5 Drive shaft, right (tube shaft)

6 Drive shaft, left (solid shaft)

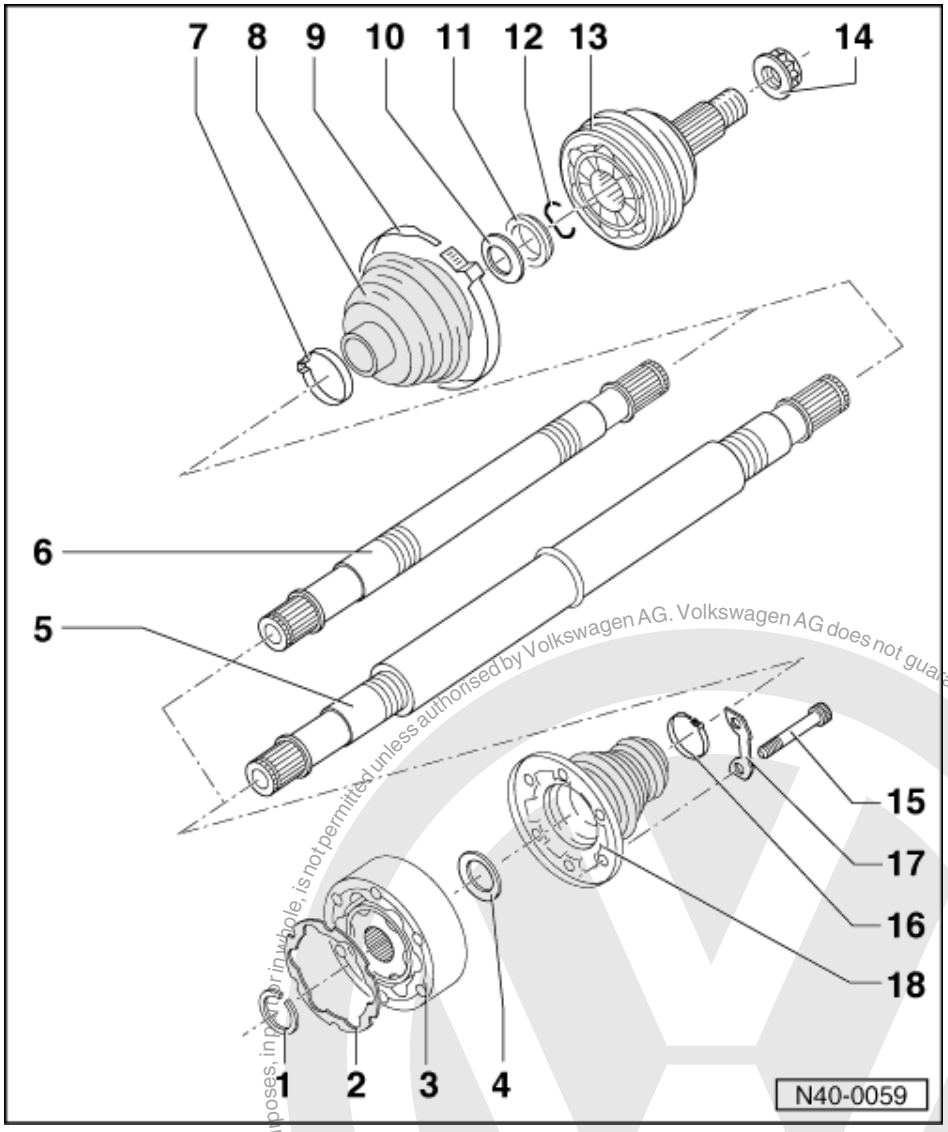

7 Hose clip
- Renew
- Tensioning => Fig. 4 and Fig. 5

8 Protective bellows
- Check for tears and chafing

9 Hose clip
- Renew
- Tensioning => Fig. 4 and Fig. 5

10 Dished washer
- Outer ø (concave side) contacts thrust washer

11 Thrust washer

12 Circlip
- Renew
- Insert in shaft groove

13 Outer constant velocity joint
- Only renew complete
- Removing =>Fig. 1
- Installing: drive onto shaft on to stop with plastic hammer

Protected by copyright. Copying for private or commercial purposes, in part or in whole, is not permitted unless authorised by Volkswagen AG. Volkswagen AG does not guarantee or accept any liability with respect to the correctness of information in this document. Copyright by Volkswagen AG.
satelettronica

- Greasing => Page 51
- Checking => Page 58

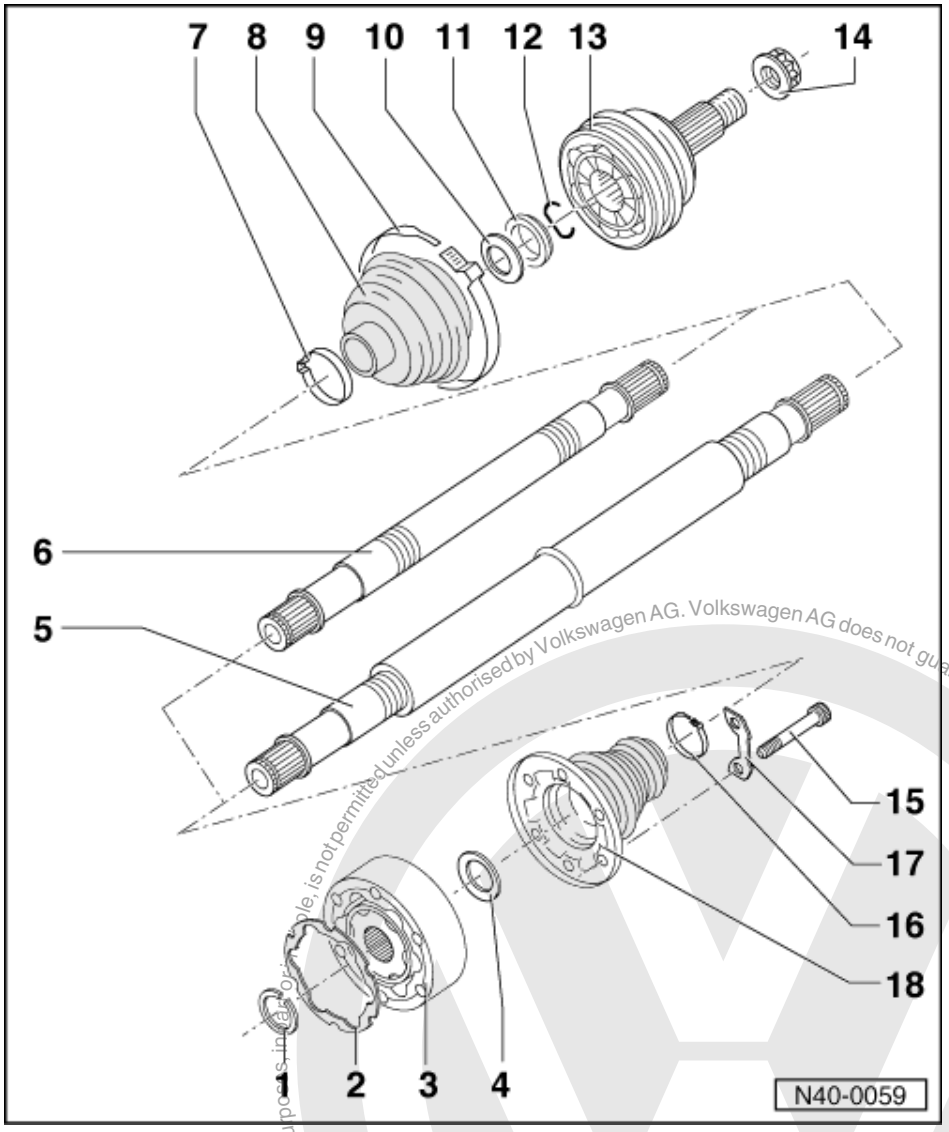

14 Self-locking 12-point nut

- Tightening =>Page 41
- Any paint residue and/or corrosion on thread of the outer joint must be removed before the nut is fitted.
- Renew each time after removing

15 Socket head multi-point bolt, 45 Nm

16 Hose clip

- Renew
- Tensioning => Fig. 4 and Fig. 5

17 Plate

18 Protective bellows for inner constant velocity joint

- Check for tears and chafing
- Drive off with drift

Protected by copyright. Copying for private and commercial purposes, in any form or medium, is not permitted unless authorised by Volkswagen AG. Volkswagen AG does not guarantee or accept any liability with respect to the correctness of information in this document. Copyright by Volkswagen AG.
satelettronica

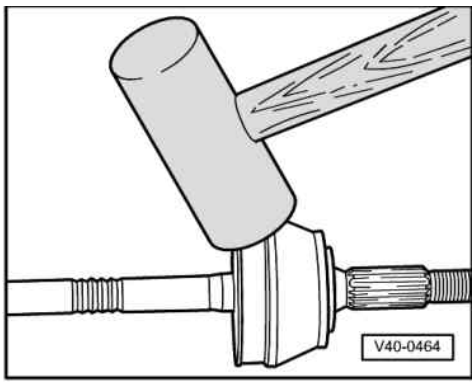

-> Fig.1 Removing outer constant velocity joint

- Drive joint off drive shaft with a firm blow from an aluminium hammer.

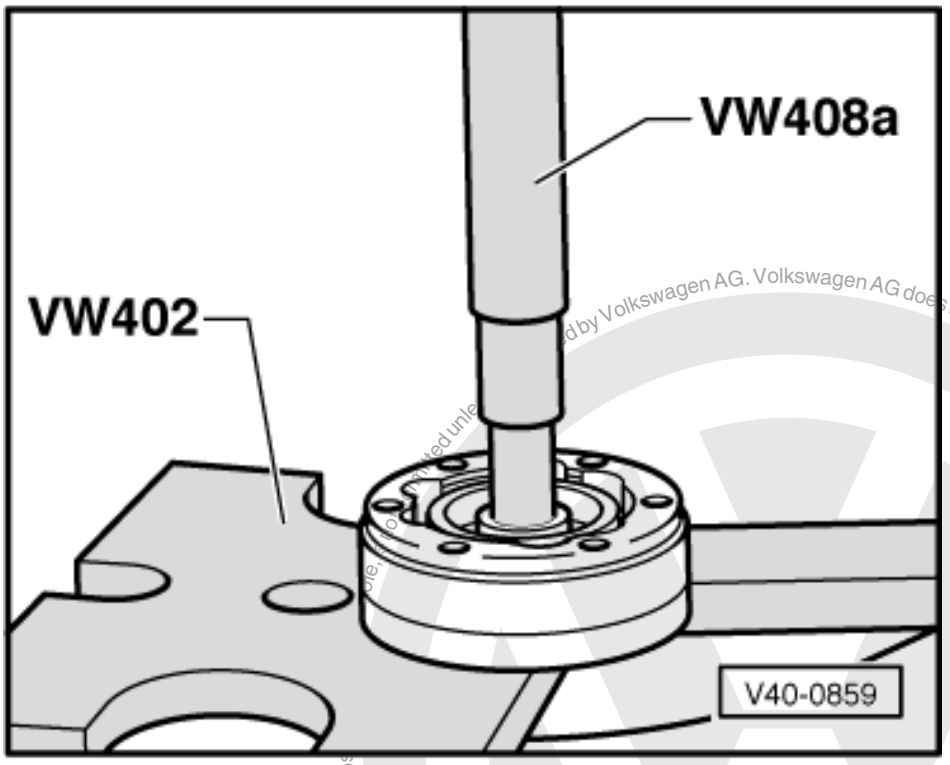

-> Fig.2 Pressing off inner constant velocity joint

Notes:

- First drive bellows off with drift
- Support ball hub

Protected by copyright. Copying for private or commercial purposes, in part, is not permitted unless authorised by Volkswagen AG. Volkswagen AG does not guarantee or accept any liability with respect to the correctness of information in this document. Copyright by Volkswagen AG.
satelettronica

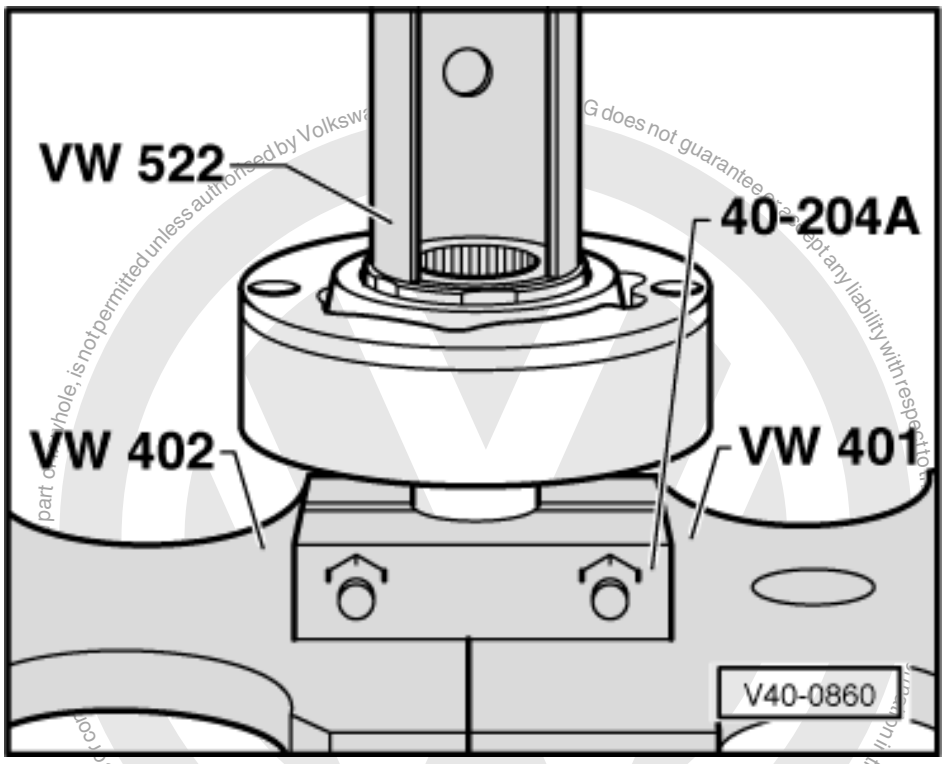

-> Fig.3 Pressing on inner constant velocity joint

- Press on joint up to stop.
- Insert circlip.

Note:

Chamfer on inner diameter of ball hub (splines) must face the contact shoulder on the drive shaft.

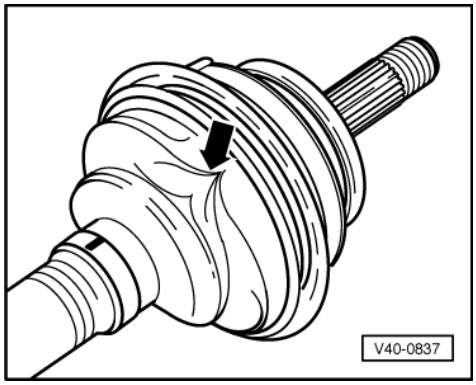

-> Fig.4 Ventilating joint bellows

Often the bellows is pushed in when installing on the joint body. This creates a vacuum inside the bellows which draws a fold in (arrow) whilst driving. Therefore after fitting, lift the bellows at small diameter end to equalize pressure.

Protected by copyright. Copying for private or commercial purposes, in part or in whole, is not permitted unless authorised by Volkswagen AG. Copyright by Volkswagen AG. Volkswagen AG does not guarantee or accept any liability with respect to the correctness of information in this document.
satelettronica

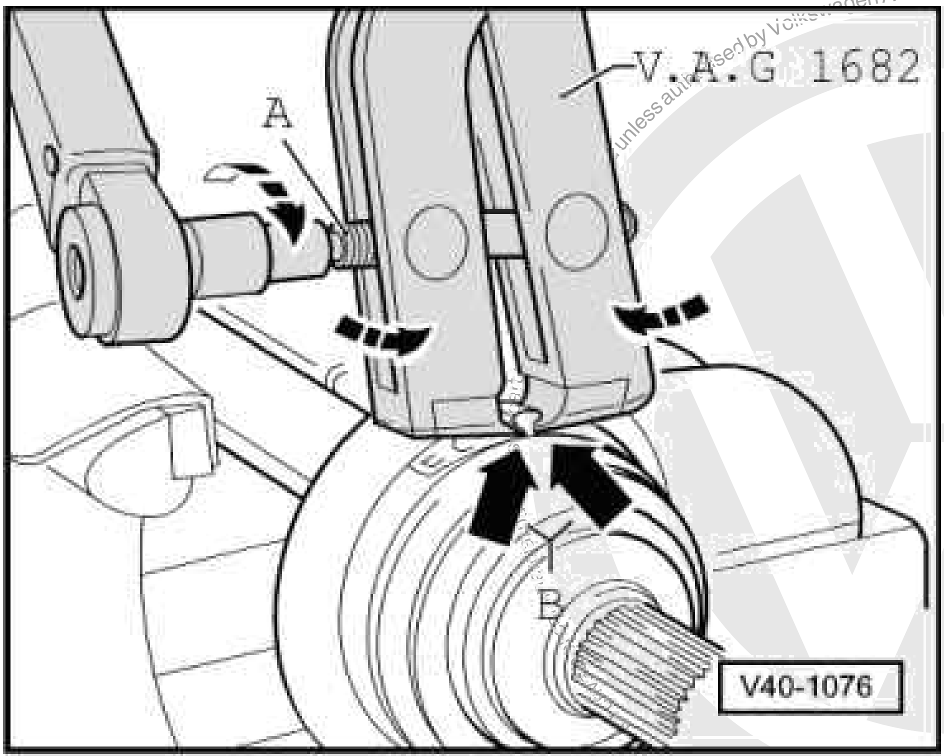

-> Fig.5 **Tensioning outer joint hose clamp**

- Fit pliers V.A.G 1682 as shown in illustration. When doing this ensure that the jaws of the pliers seat in the corners (arrow B) of the hose clip.
- Tension hose clamp by turning the spindle with a torque wrench (do not cant pliers).

Notes:

- Due to the hard material of the joint bellows (compared to rubber) and, due to this the necessary stainless steel hose clamp, it is only possible to tension the hose clamp with pliers V.A.G 1682.
- Tightening torque: 20 Nm.
- Use torque wrench -C- with 5...50 Nm range (e.g. V.A.G 1331).

Protected by copyright. Copying for private or commercial purposes, in part or in whole, is not permitted unless authorised by Volkswagen AG. Volkswagen AG does not guarantee or accept any liability with respect to the correctness of information in this document. Copyright by Volkswagen AG.
satelettronica

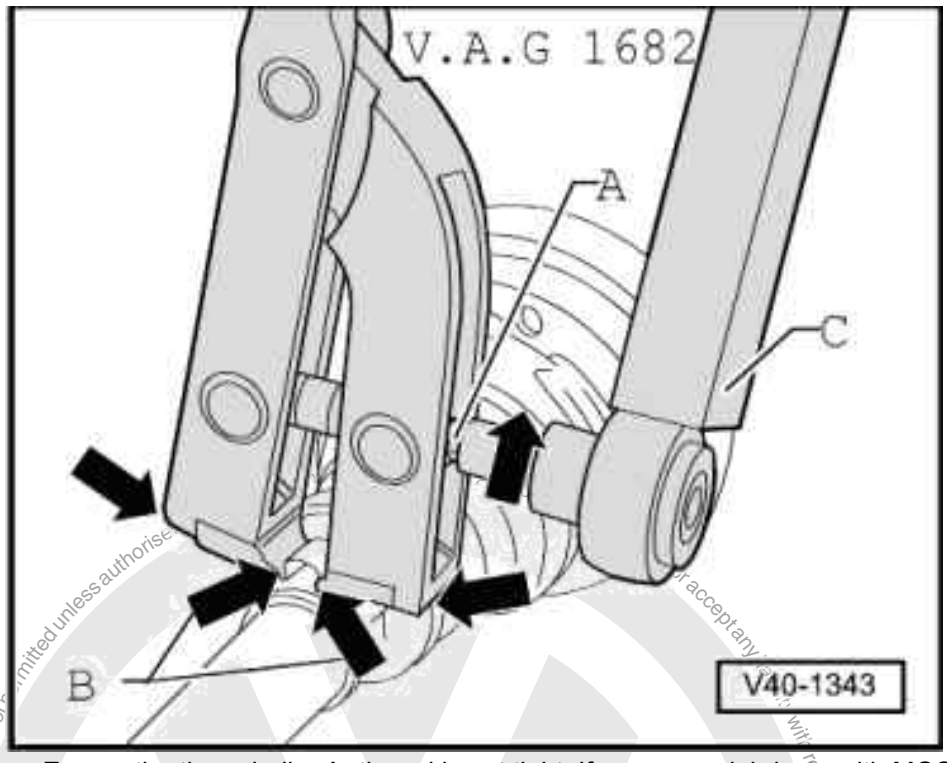

- Ensure the the spindle -A- thread is not tight. If necessary lubricate with MOS 2 grease
- If the thread is tight e.g. dirty, the required tensioning force for the hose clamp will not be achieved in spite of correct tightening torque settings.

Protected by copyright. Copying for private or commercial purposes, in part or in whole, is not permitted unless authorised. Copyright by Volkswagen AG. No liability or accept any liability with respect to the correctness of information in this document.
satelettronica

-> Fig.6 Tensioning inner joint hose clamp

2.4 - Checking outer constant velocity joint

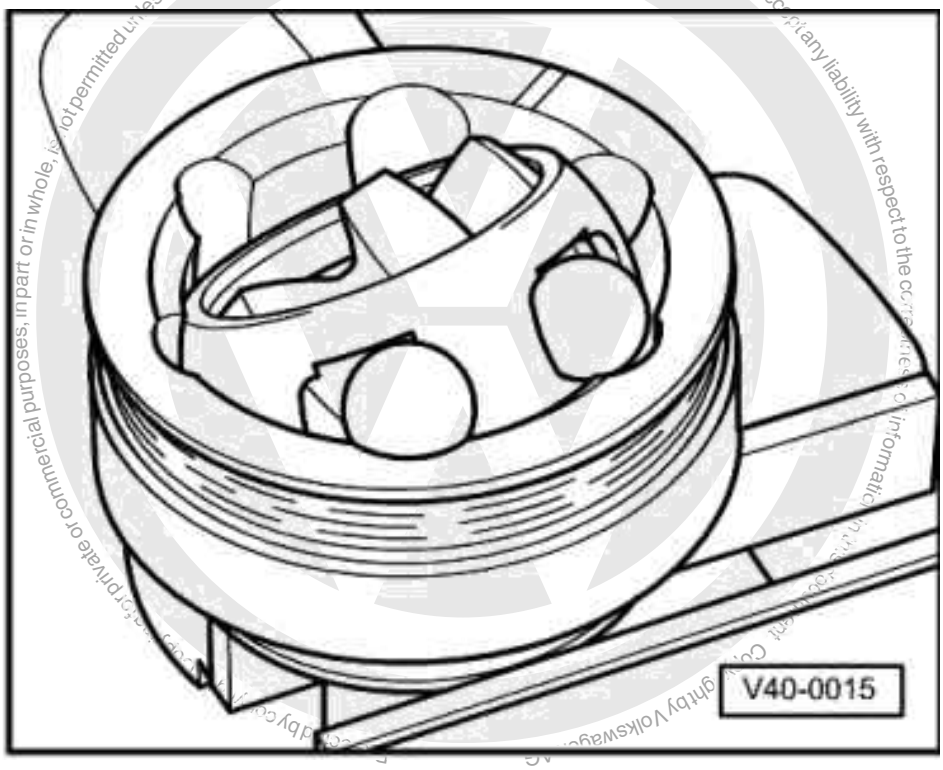

The joint should be dismantled to renew dirty grease or for checking the balls and ball tracks for wear and damage.

Removing:

- -> Before dismantling mark position of the ball hub in relation to the ball cage and housing with an electric scriber or oil stone.
- Swivel ball hub and ball cage.
- Remove balls one after the other.

satelettronica

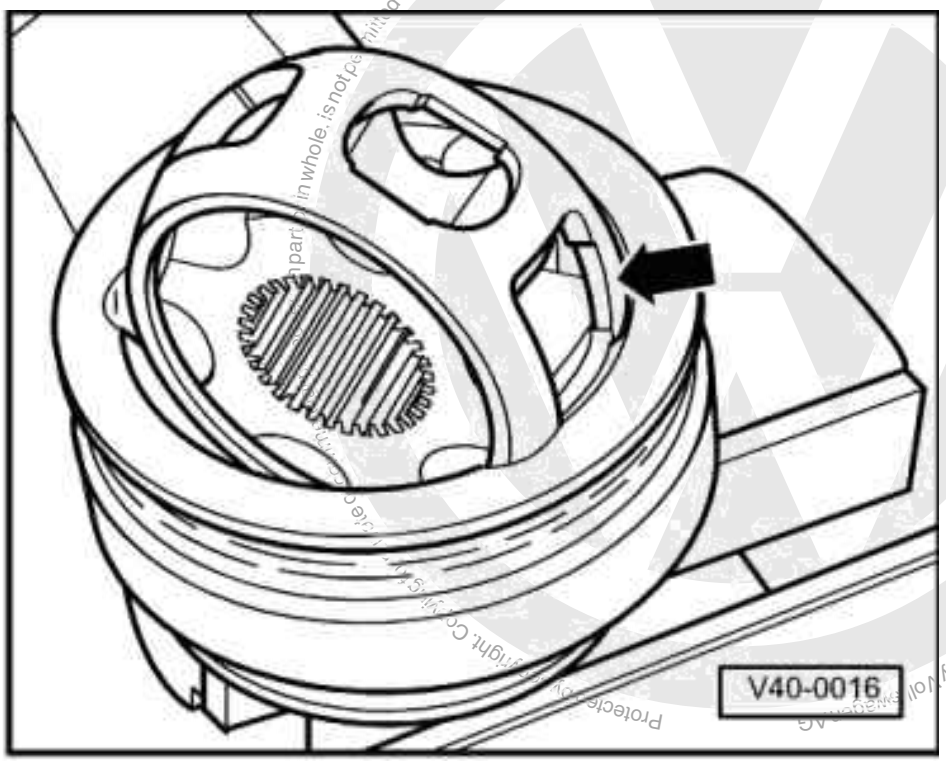

- -> Turn cage until the two rectangular windows (arrow) are aligned with the joint housing.
- Lift out cage together with hub.

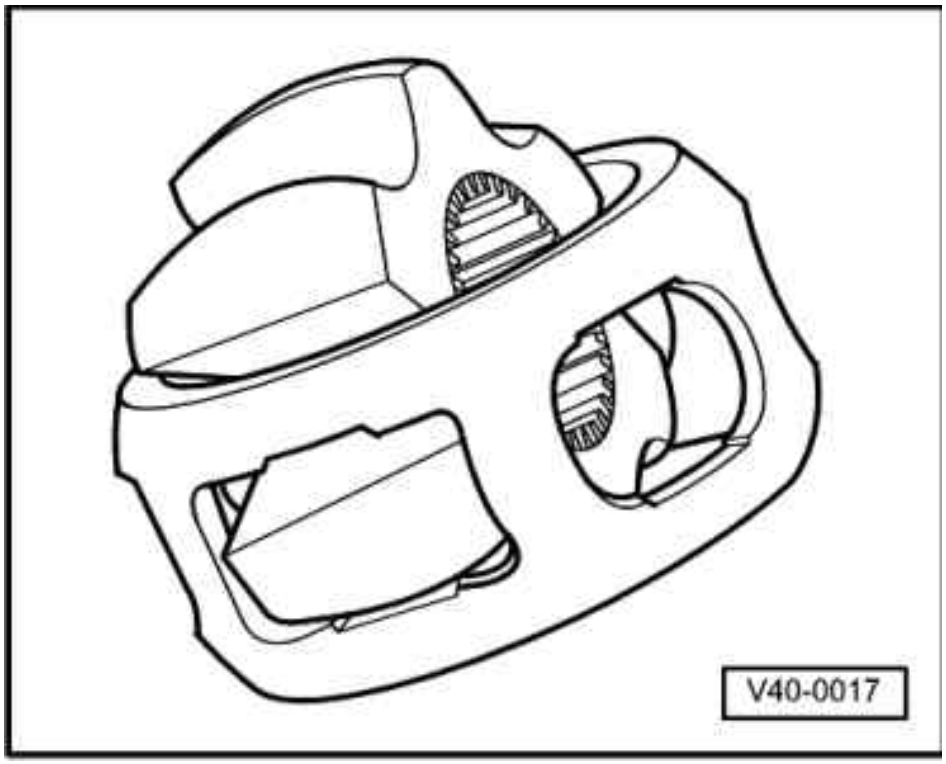

- -> Swing segment of hub into rectangular cage window.
- Tilt hub out of cage.

Note.

The 6 balls of each joint belong to one tolerance group. Check stub axle, hub, cage and balls for small indentations (pitting) and signs of seizure. Excessive backlash in joint will be noticed as a knock during load changes,

satelettronica

in such cases the joint must be renewed. Polished areas and ball track marks are not a reason for changing the joint.

Installing:

- Press half of the total amount of grease (45 gramme) into the joint housing.
- Install cage with hub in the joint housing.
- Press in the balls one after the other from opposite sides whereby the original position of the hub to cage and joint housing must be restored.
- Fit new circlip in the hub.
- Distribute the remaining grease in the bellows.

2.5 - Checking inner constant velocity joint

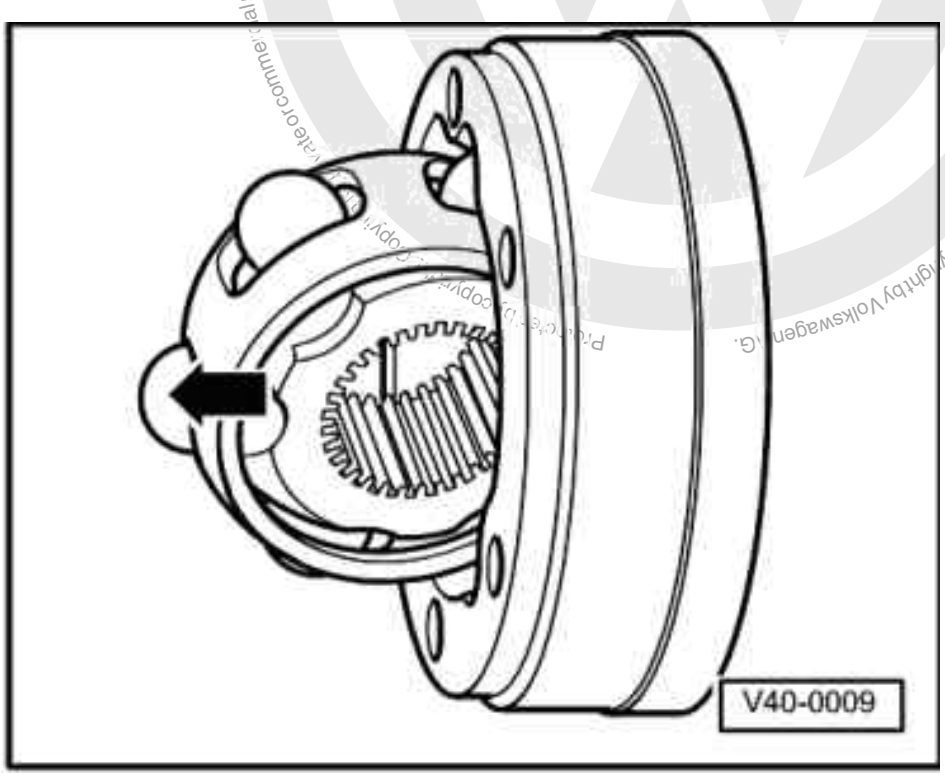

The joint should be dismantled to renew dirty grease and when checking the balls and ball tracks for wear and damage.

- -> Swivel ball hub and ball cage.
- Press out ball cage in direction of arrow.
- Press balls out of cage.

Note:

The ball hub and joint are paired and must not be interchanged.

Production, copy, copyright, copy, private or commercial purposes, in part or in whole, is not permitted unless authorised by Volkswagen AG. Volkswagen AG does not guarantee or accept any liability with respect to the correctness of information in this document. Copyright by Volkswagen AG.

satelettronica

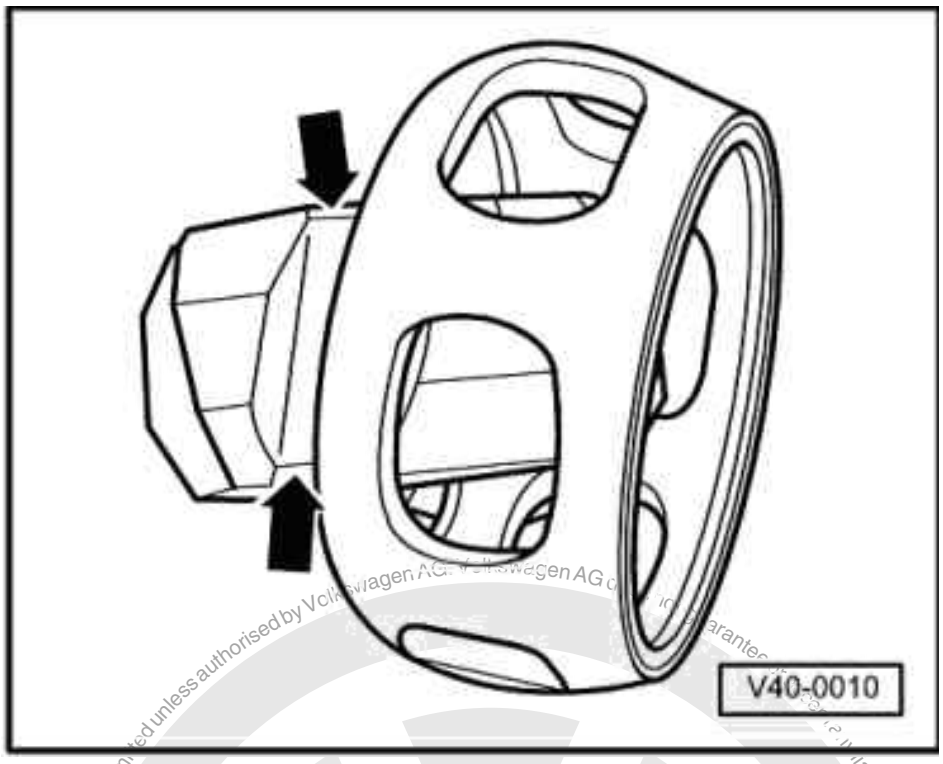

- -> Tilt ball hub out of ball cage over ball track (arrows).
- Check joint housing, ball hub, ball cage and balls for indentations (pitting) and signs of seizure.

Note:

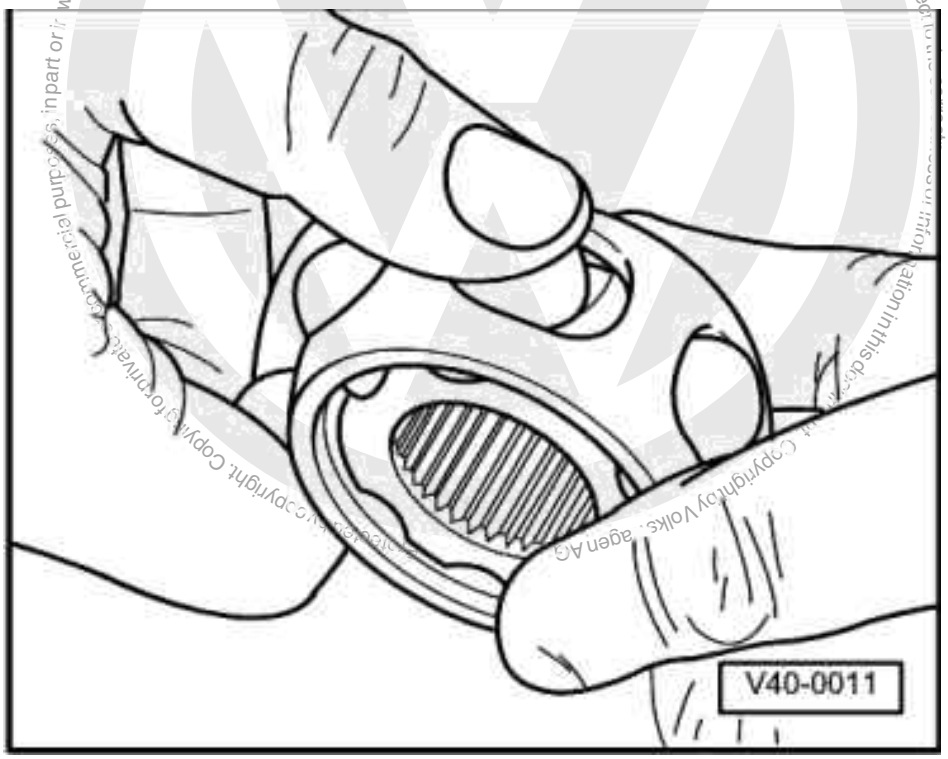

Excessive backlash in joint will be noticed as a knock during load changes. In such cases the joint must be renewed. Polished areas and ball track marks are not a reason for changing the joint.

satelettronica

Copyrighted by Volkswagen AG. Volkswagen AG does not guarantee or accept any liability with respect to the correctness of information in this document. Copying for private or commercial purposes, in part or in whole, is not permitted unless authorised by Volkswagen AG.

Installing:

- -> Insert ball hub over both chamfers into the ball cage. The hub can be installed in any position. Press balls into the cage.
- Insert hub with cage and balls at right angle to the joint.

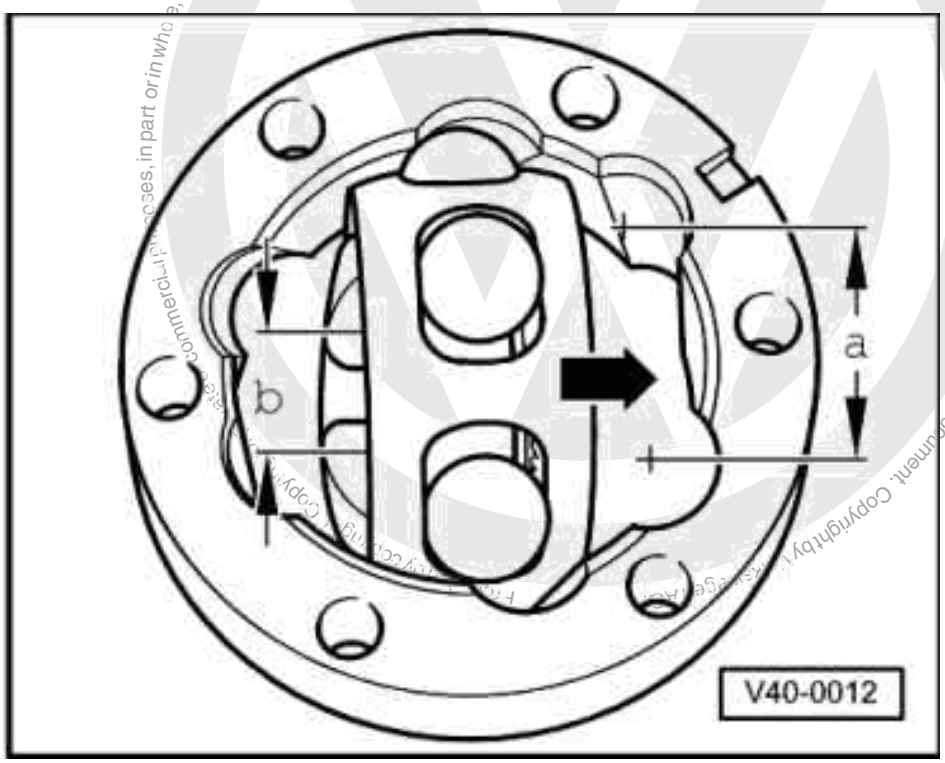

Notes:

- -> When inserting ensure that the wide spacing -a- on joint housing is aligned with the narrow spacing -b- on the hub after swivelling in.
- Chamfer on inner diameter of ball hub (splines) must face larger diameter of joint housing.

satelettronica

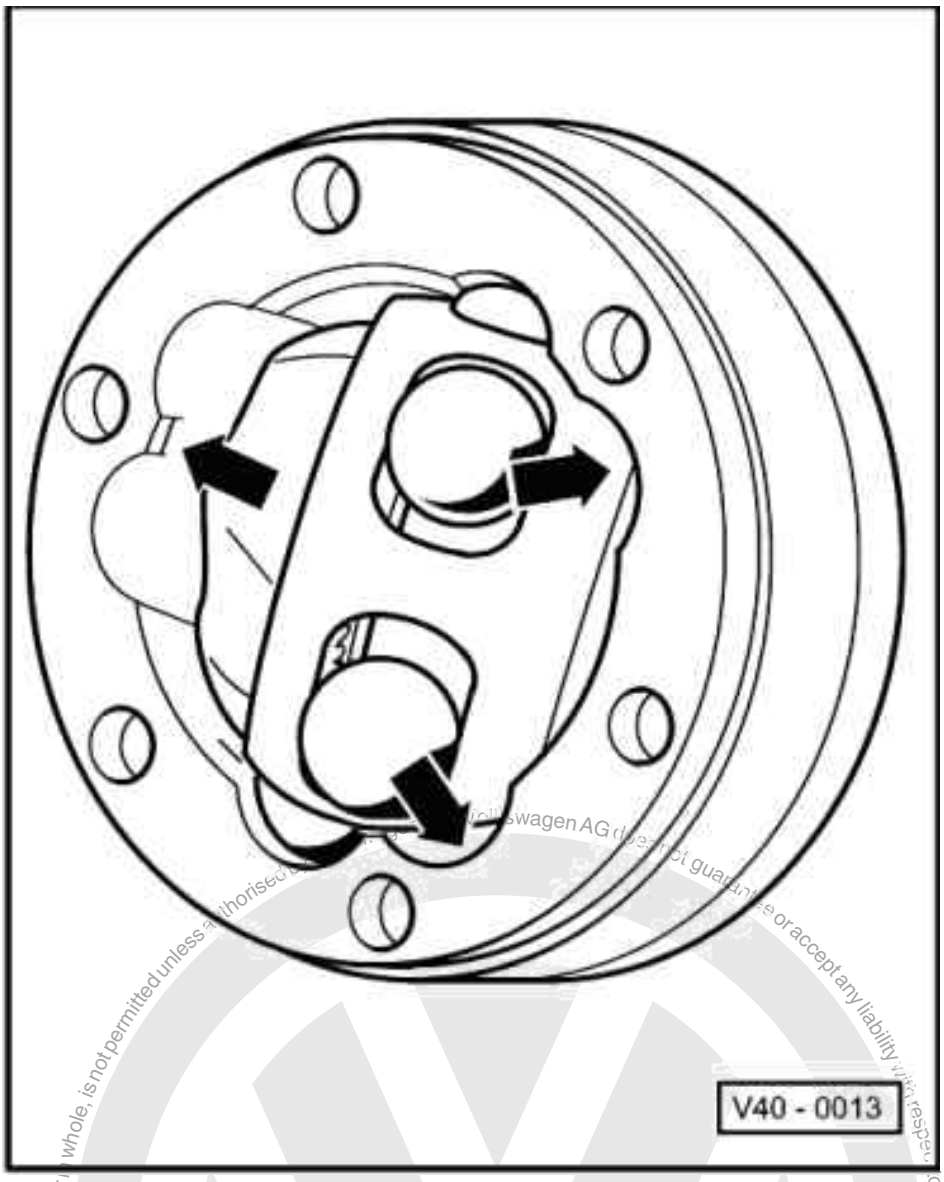

- -➢ Swivel in ball hub, whereby the hub must be swivelled out of the cage (arrows) far enough to allow the balls to fit into the ball tracks.

satelettronica

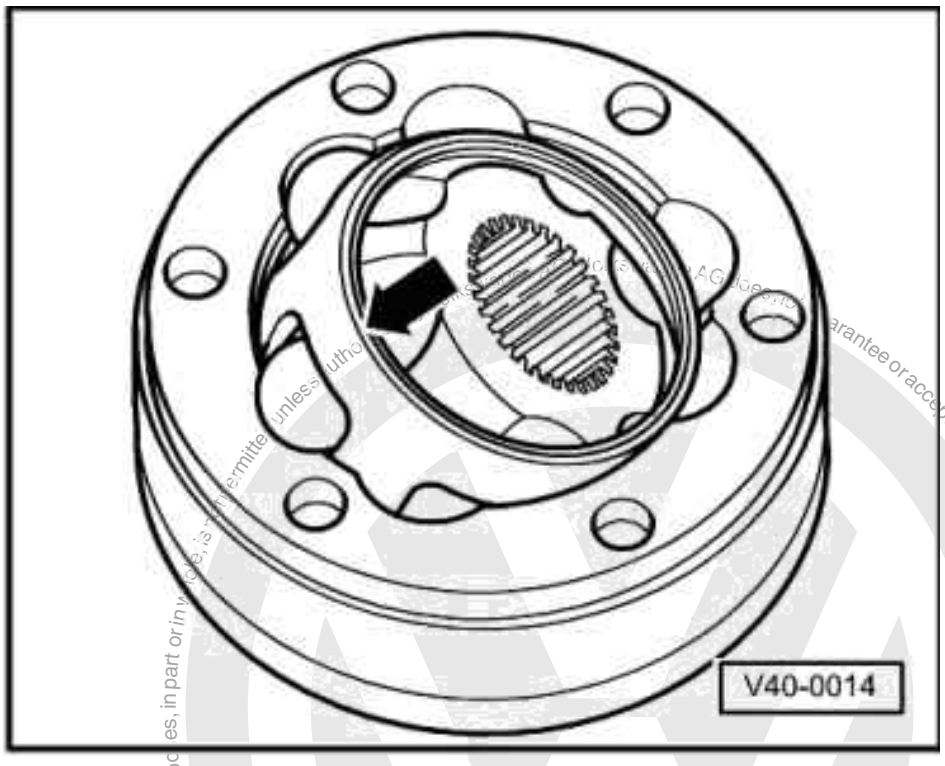

- -> Swivel in the hub with balls by applying firm pressure on the cage (arrow).

Checking operation of constant velocity joint:

The constant velocity joint is correctly assembled when the ball hub can be moved by hand backwards and forwards over its entire axial movement range.

Protected by copyright. Copying for private or commercial purposes, in part or in whole, is not permitted unless authorised by Volkswagen AG. Volkswagen AG does not guarantee or accept any liability with respect to the correctness of information in this document. Copyright by Volkswagen AG.

satelettronica

2.6 - Assembly overview drive shaft with triple roller joint

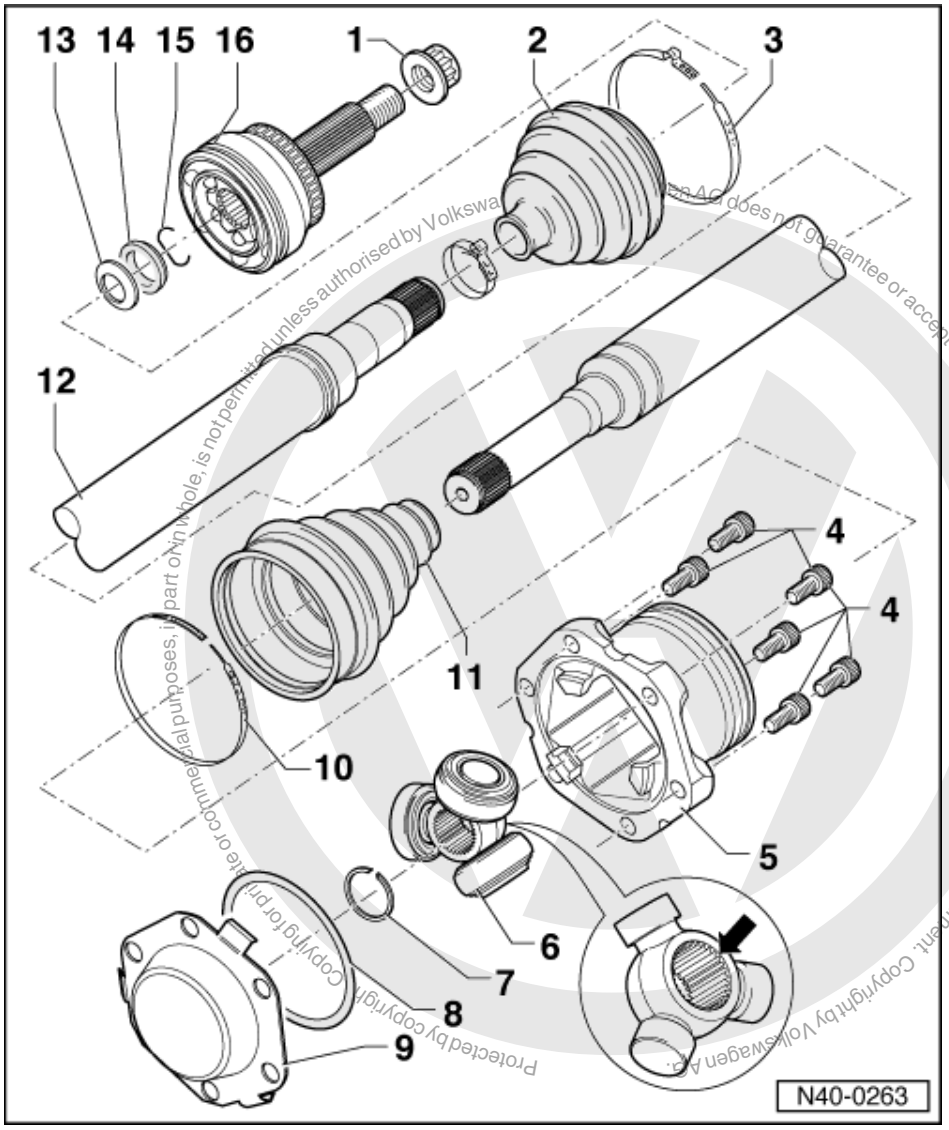

Protected by copyright. Copyright by Volkswagen AG.
Volkswagen AG does not guarantee or accept any liability with respect to the correctness of information in this document. Copyright by Volkswagen AG.
Copying for private or commercial purposes, in part or in whole, is not permitted unless authorised by Volkswagen AG.
satelettronica

1 Self-locking 12-point nut
- Tightening =>Page 41
- Any paint residue and/or corrosion on thread of the outer joint must be removed before the nut is fitted.
- Renew each time after removing

2 Constant velocity joint bellows
- Check for tears and chafing
- Balance pressure, by briefly ventilating bellows before tensioning the small clamp=>Page 55

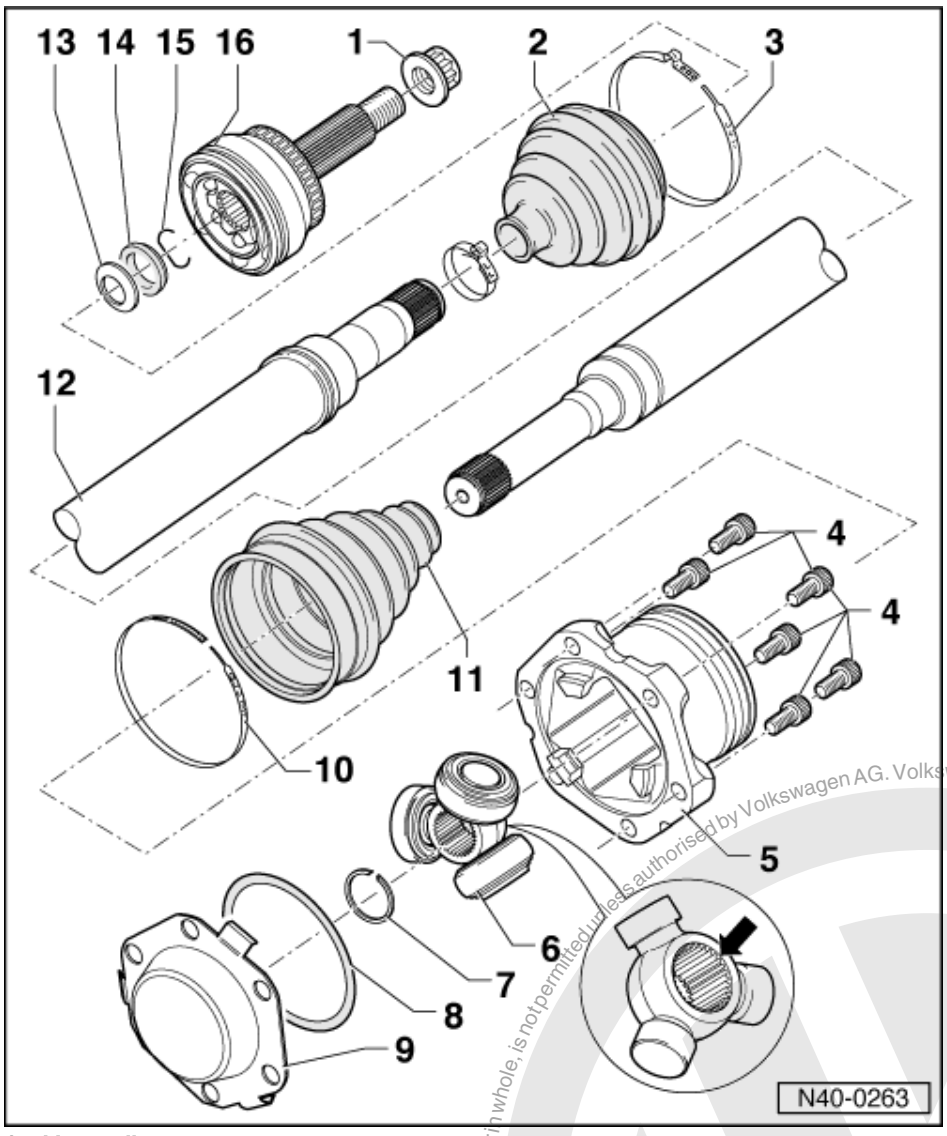

3 Hose clip
4 Multi-point socket head bolt, 40 Nm
- M 8 x 28

5 Joint piece
6 Tripodic star with rollers
The chamfer -arrow- points to drive shaft splines.

7 Circlip
- Renew

8 Seal
- Renew

9 Cover
- Renew

10 Hose clamp
For tripodic joint

Protected by copyright. Copying for private or commercial purposes, in part or in whole, is not permitted unless authorised by Volkswagen AG. Volkswagen AG does not guarantee or accept any liability with respect to the correctness of information in this document. Copyright by Volkswagen AG.
satelettronica

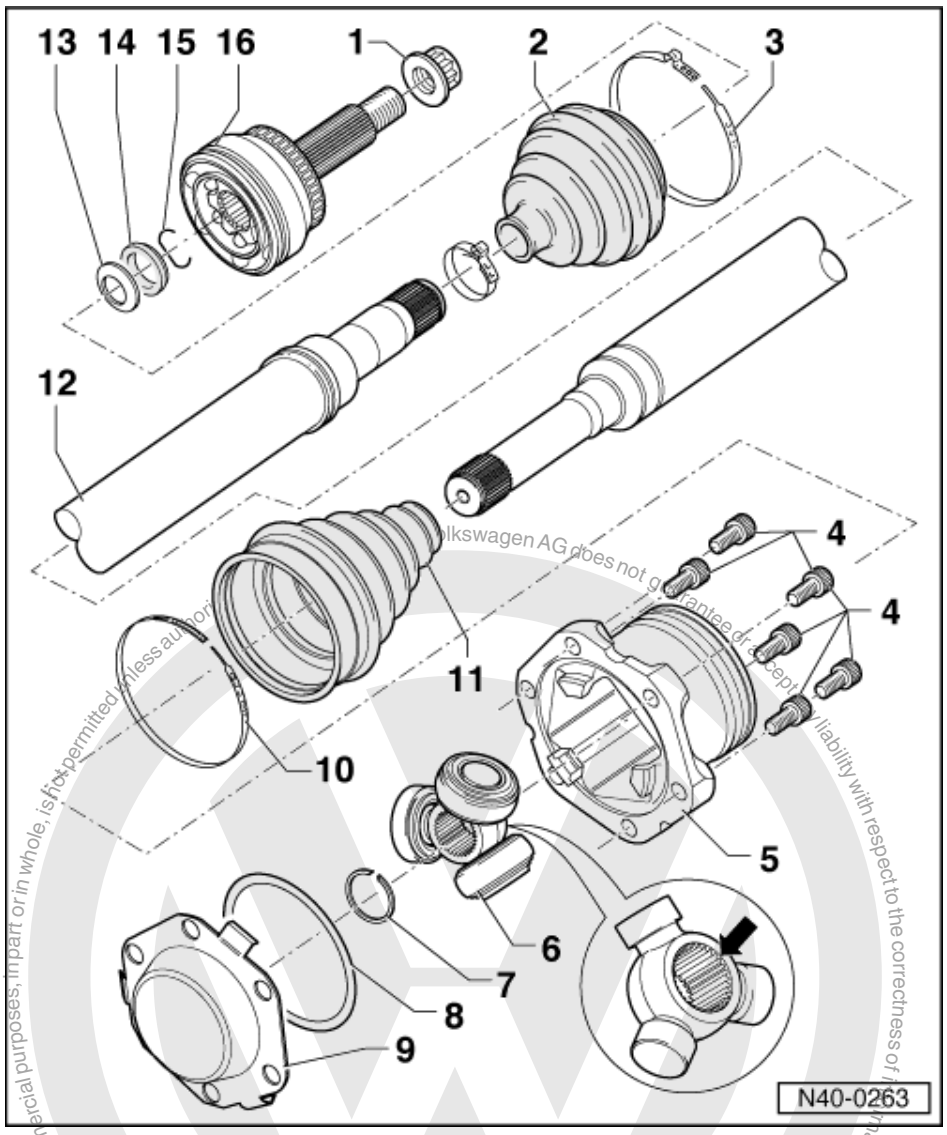

11 Triple roller joint bellows
- Check for tears and chafing

12 Drive shaft

13 Dished washer
- Outer ø (concave side) contacts thrust washer

14 Thrust washer

15 Circlip
- Renew
- Insert in shaft groove

16 Outer constant velocity joint
- Only renew complete
- Removing =>Page 54
- Installing: drive onto shaft with plastic hammer until compressed circlip seats
- Greasing => Page 51
- Checking => Page 58

Volkswagen AG does not guarantee or accept any liability with respect to the correctness of information in this document. Copyright by Volkswagen AG.
Protected by copyright. Copying for private or commercial purposes, in part or in whole, is not permitted unless authorised by Volkswagen AG.
satelettronica

2.7 - Servicing drive shaft with triple roller joint

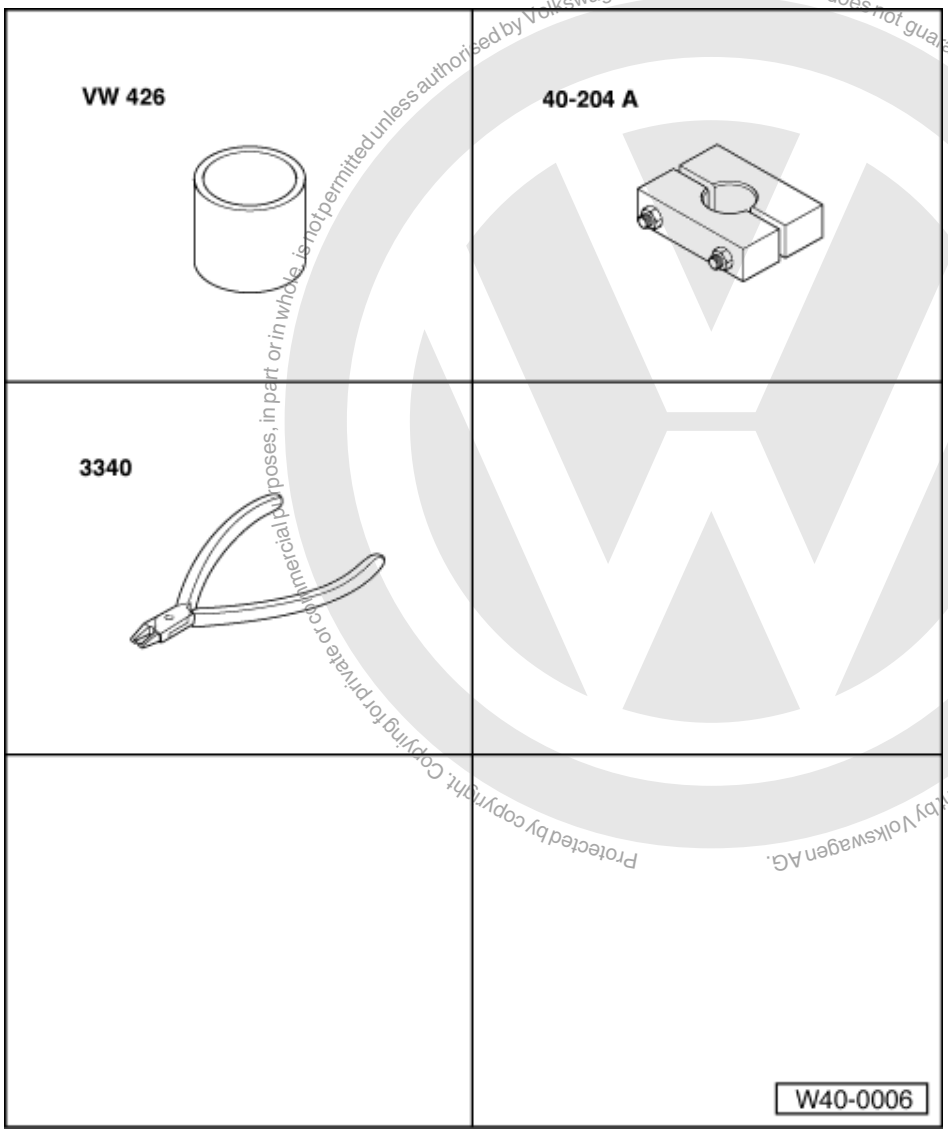

Protected by copyright. Copying for private or commercial purposes, in part or in whole, is not permitted unless authorised by Volkswagen AG. Volkswagen AG does not guarantee or accept any liability with respect to the correctness of information in this document. Copyright by Volkswagen AG.

satelettronica

Special tools and workshop equipment required

- VW 426 Tube
- 40-204 A Tensioner
- 3340 Pliers

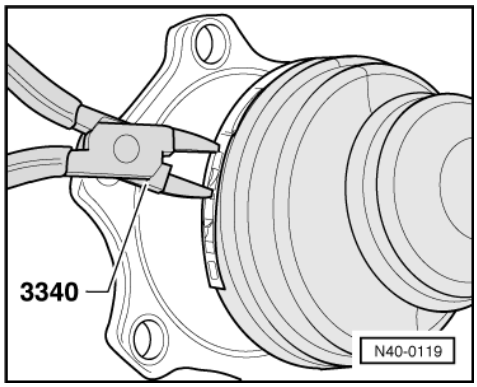

Dismantling

- -> Open hose clamp.
- Open clamp on shaft and slide back joint protective bellows.

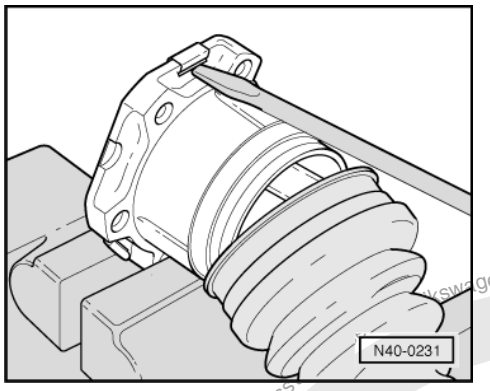

- -> Open out metal tabs with a screwdriver and lever off cover.

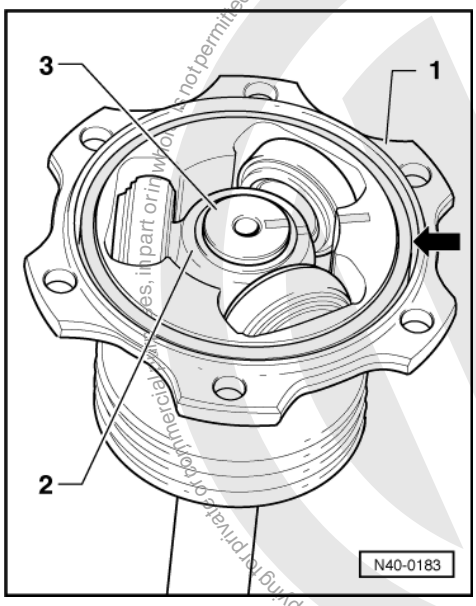

- -> Mark installation position of parts 1 . . . 3.

If the parts are not marked and when assembling, the components are not brought back to their previous installation position then it is possible that it will be noisy when driving.

A waterproof felt tipped pen is suitable for marking.

1 - Joint
2 - Triple roller star
3 - Drive shaft

- Take O-ring -arrow- out of groove.
- Hold joint and take drive shaft out of vice.

satelettronica

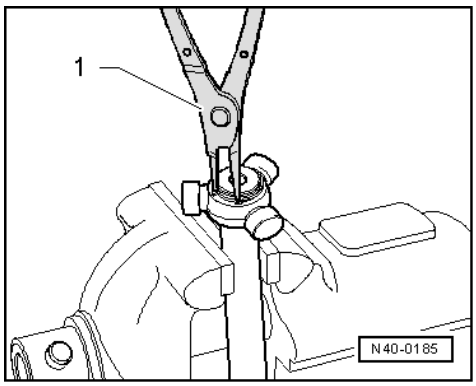

- -> Remove circlip.

1 - Pliers (commercial type) or VW 161 A

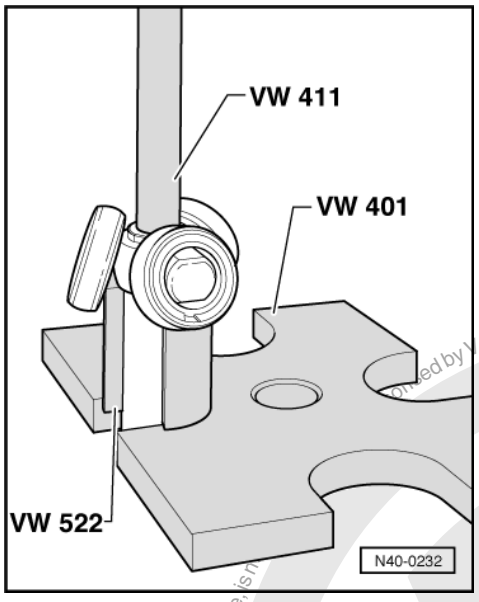

- Insert drive shaft in press.
- -> Hold drive shaft, then press triple roller star off drive shaft.
- Take off Triple roller star with rollers and place on a clean surface.
- Pull joint off shaft.
- Pull protective bellows off shaft.
- Clean shaft and housing.

Assembling

- Slide joint protective bellows onto shaft.
- Slide joint onto shaft.

Protected by copyright. Copying for private or commercial purposes, in part or in whole, is not permitted unless authorised by Volkswagen AG. Volkswagen AG does not guarantee or accept any liability with respect to the correctness of information in this document. Copyright by Volkswagen AG.
satelettronica

Assembling triple roller star

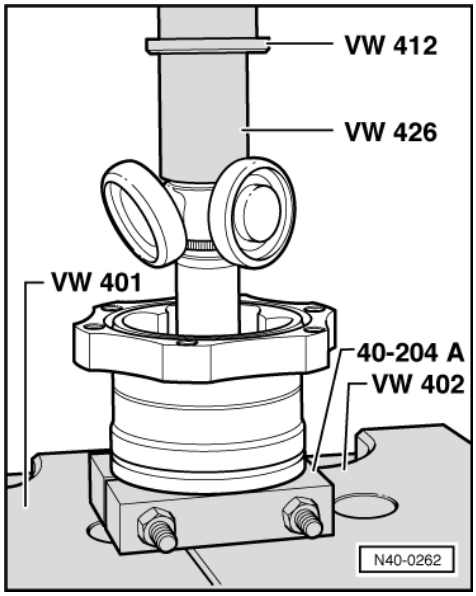

The chamfer on star faces towards shaft, this is used as an assembly aid.

- -> Fit triple roller star onto shaft as per markings and press onto stop.
- Insert circlip, ensure seated correctly.
- Press 60 grammes of joint grease G 000 633, from repair set, into triple roller joint.
- Slide joint over rollers and hold.
- Press 60 grammes of joint grease G 000 633, from repair set, into the reverse side of the tripodic joint.
- Fit joint protective bellows.

The ridge in the joint protective bellows must seat in the joint groove.

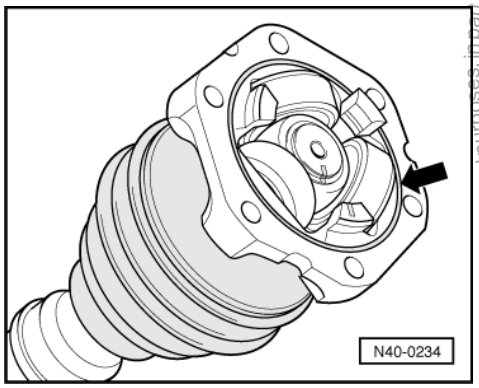

- Now take drive shaft out of vice and tension joint in vice.
- -> Insert new seal -arrow- from repair set into groove.
- Fit new cover to joint.

The drillings of the cover and joint must align.

Protected by copyright. Copying for private or commercial purposes, in part or in whole, is not permitted unless authorised by Volkswagen AG. Volkswagen AG does not guarantee or accept any liability with respect to the correctness of information in this document. Copyright by Volkswagen AG.
satelitronica

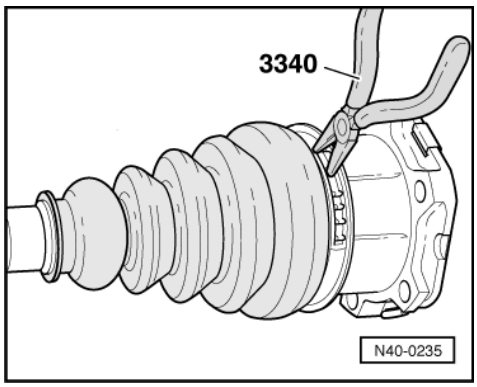

- -> Fit hose clip.

Protected by copyright. Copying for private or commercial purposes, in part or in whole, is not permitted unless authorised by Volkswagen AG. Volkswagen AG does not guarantee or accept any liability with respect to the correctness of information in this document. Copyright by Volkswagen AG.

satelettronica

42 - Rear suspension

1 - Servicing rear axle

1.1 - Servicing rear axle

1.2 - Removing and installing rear axle

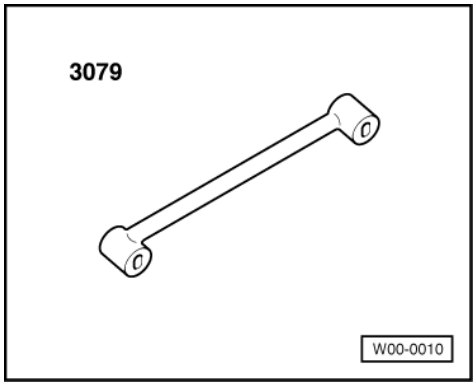

Special tools and workshop equipment required

- 3079 Counter-hold

Removing

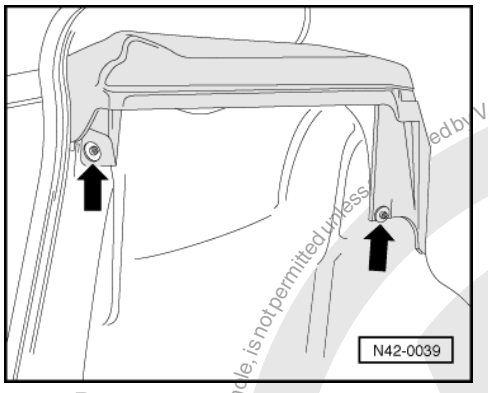

- -> Remove cover.

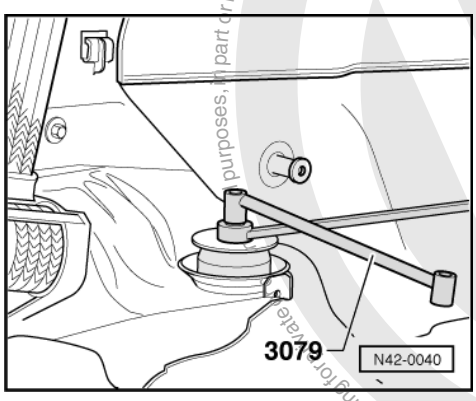

Protected by copyright. Copying for private purposes, in part or in whole, is not permitted unless authorised by Volkswagen AG. Volkswagen AG does not guarantee or accept any liability with respect to the correctness of information in this document. Copyright by Volkswagen AG.

satelettronica

- -> Unbolt suspension strut form interior.

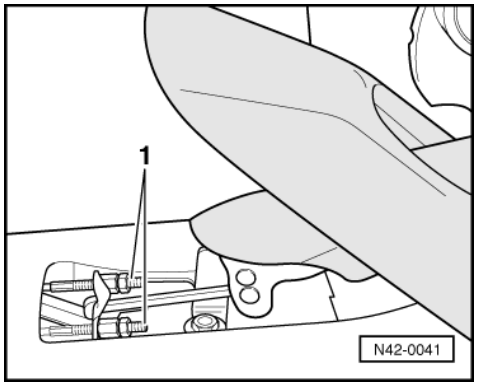

- -> Pull off handbrake lever trim.
- Disconnect handbrake cables -1- from handbrake lever.
- Separate ABS sensor wiring at connector under rear seat, and pass through floor plate (only vehicles with ABS).

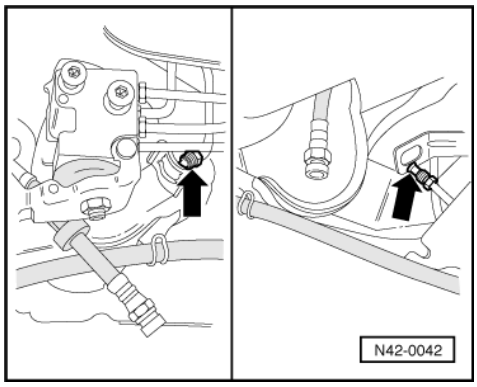

- -> Disconnect brake pipes (arrows).
- Pull handbrake cables out of guide tubes.
- Place gearbox jack V.A.G 1383 A in position.

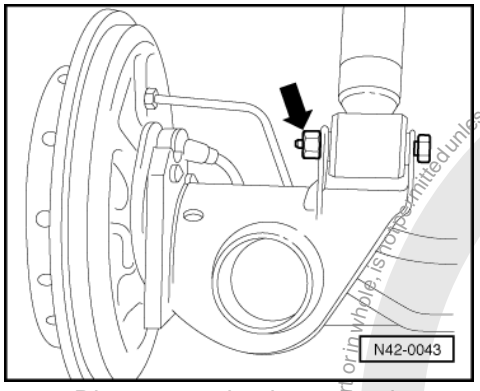

- -> Disconnect shock suspension strut (arrow) from rear axle.

Installing

Install in reverse order

Protected by copyright. Copying for private or commercial purposes, in part or in whole, is not permitted unless authorised by Volkswagen AG. Volkswagen AG does not guarantee or accept any liability with respect to the correctness of information in this document. Copyright by Volkswagen AG.
satelettronica

1.3 - Assembly overview, rear axle beam >09.99

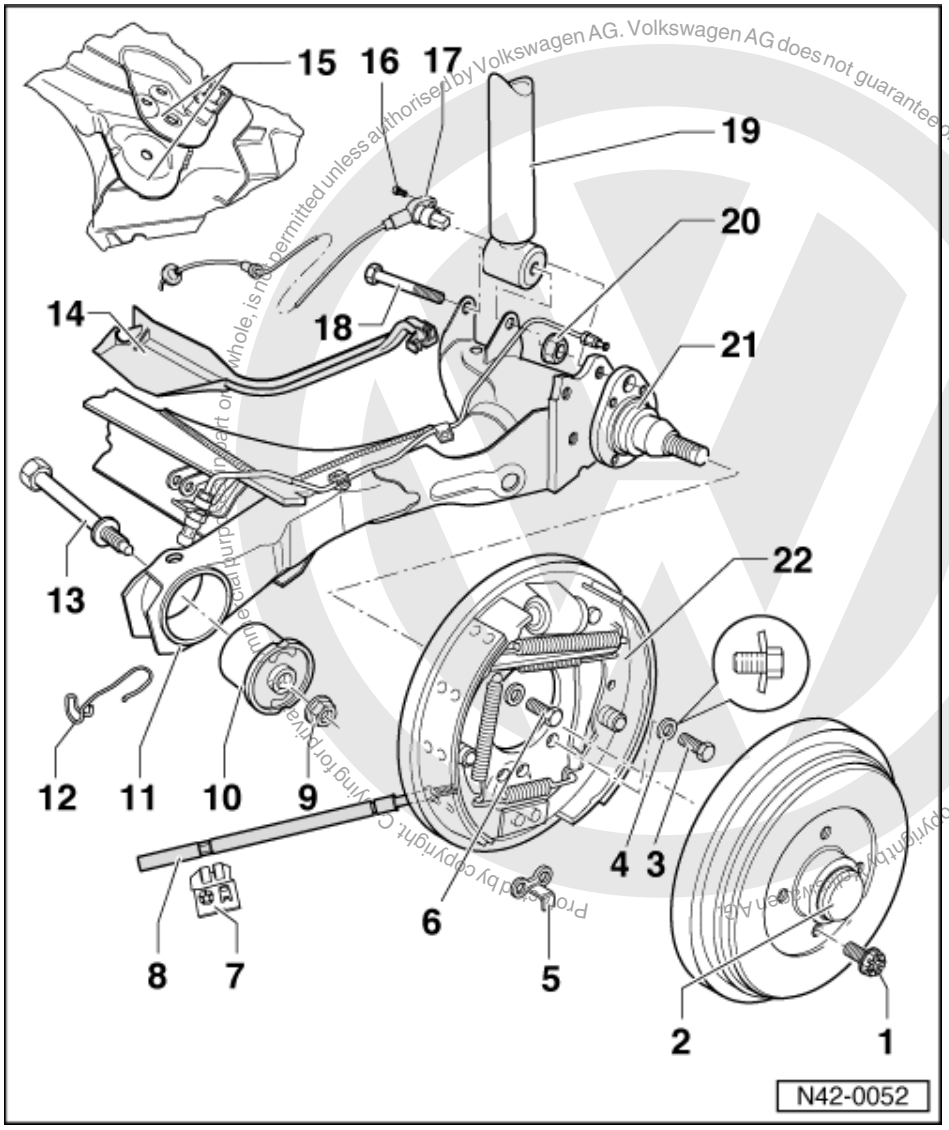

Produced by copyright. Copying for private or commercial purposes, in whole or in part, is not permitted unless authorised by Volkswagen AG. Volkswagen AG does not guarantee or accept any liability with respect to the correctness of information in this document. Copyright by Volkswagen AG.

satelettronica

Note:

Welding and straightening on axle beam and stub axle is not permissible.

1 110 Nm
2 Wheel bearing
- Servicing =>Page 91

3 Bolt, 60 Nm
- Use with dished spring - 4 -
- Used sometimes during production instead of bolt - 6 -
- Mixed installation with bolt - 6 - is possible

4 Dished spring
- Observe installation position

5 Guide for brake cable
- Only for 180 mm øbrake drum
- Bolted together without dished spring - 4 -

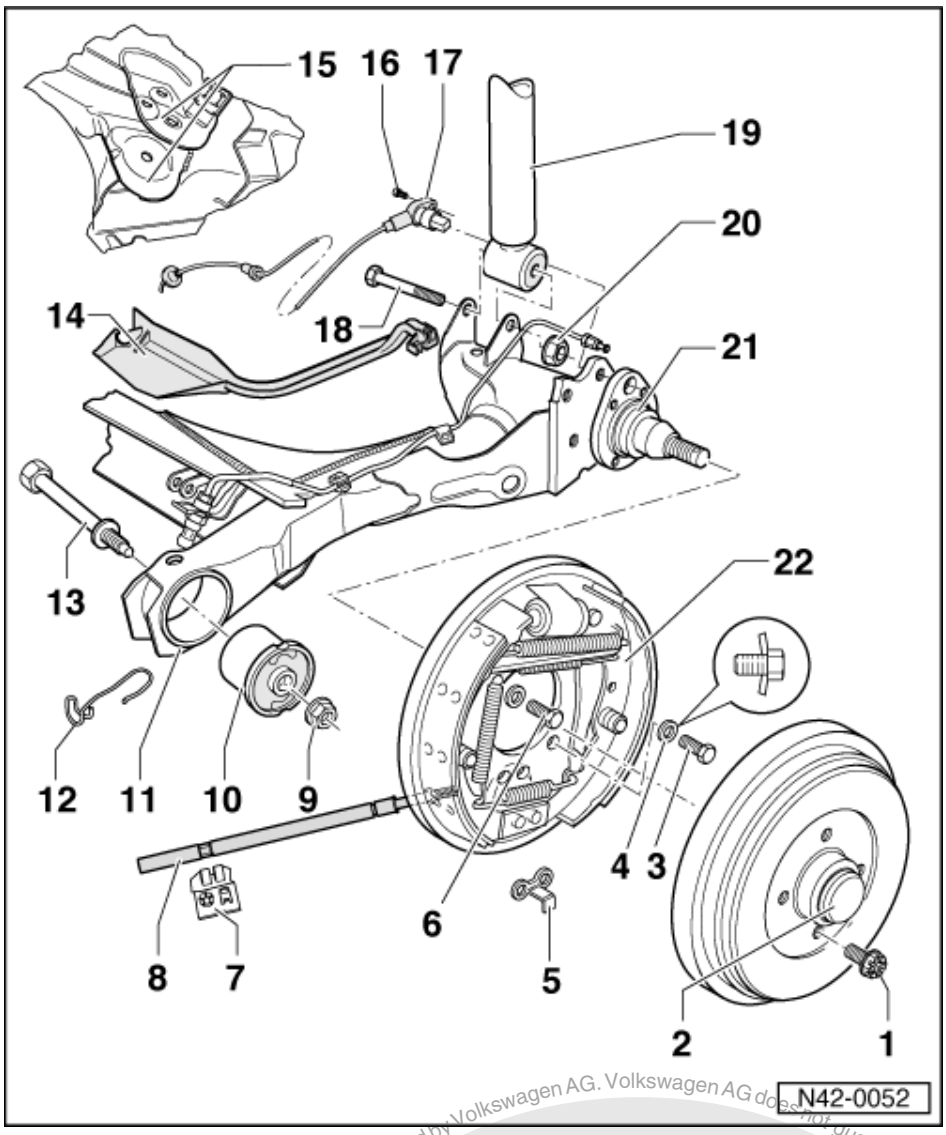

6 Bolt, 60 Nm
- Dished spring - 4 - must not be used
- Used sometimes during production instead of bolt - 3 -
- Mixed installation with bolt - 3 - is possible
- Not supplied as a replacement part

7 Handbrake cable bracket
- Renew

8 Handbrake cable

9 65 Nm
- When tightening the nut the axle beam must be in the horizontal position (unladen vehicle state)
- Renew each time after removing

10 Bonded rubber mounting
- Removing and installing=>Page 80

satelettronica

Protected by copyright. Copying for private or commercial purposes, in part or in whole, is not permitted unless authorised by Volkswagen AG. Volkswagen AG does not guarantee or accept any liability with respect to the correctness of information in this document. Copyright by Volkswagen AG.

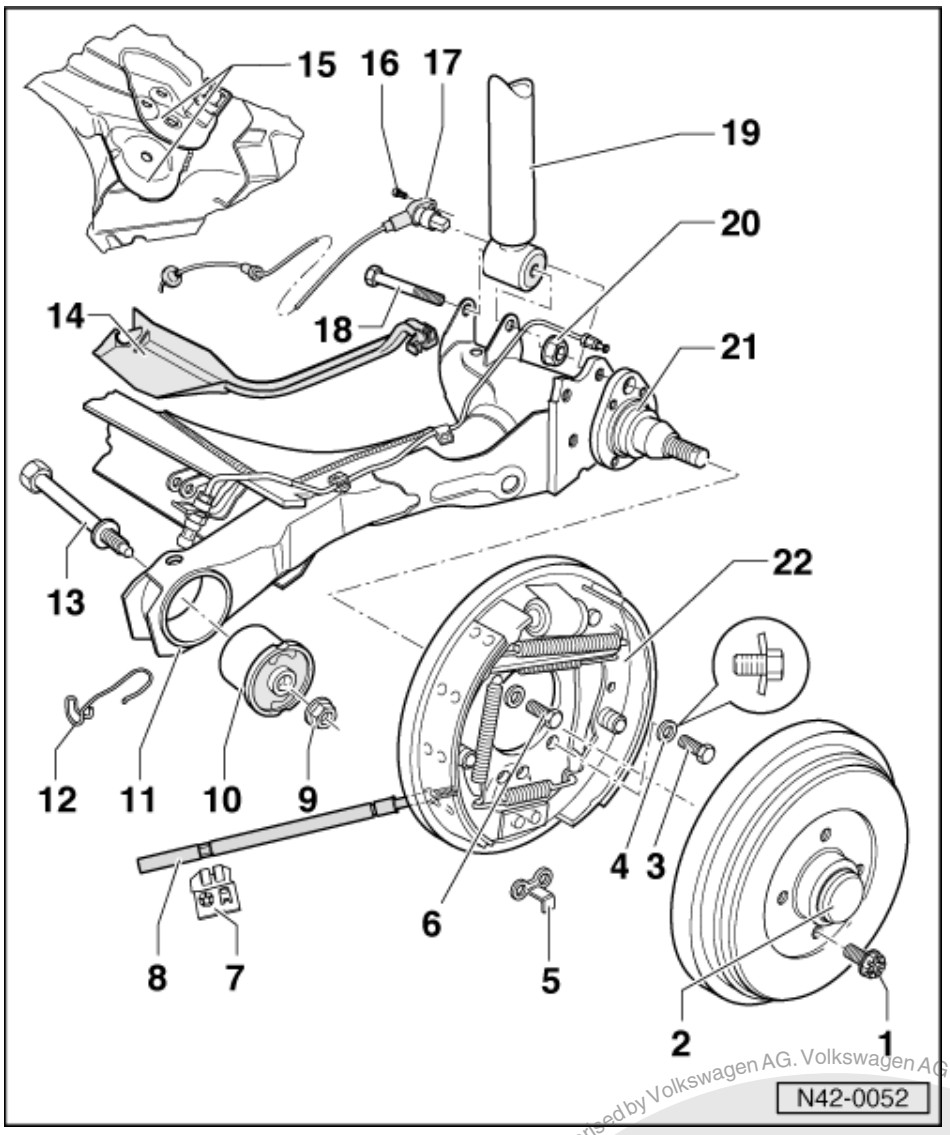

11 Axle beam
- With anti-roll bar on 16V vehicles
- Stub axle contact surfaces and threaded holes are to be free of paint and dirt

12 Handbrake cable bracket

13 Bolt
- Fit from centre of vehicle

14 Cable channel
- Only on vehicles with ABS

15 Rear axle bearing bracket

16 Hexagon socket head bolt, 10 Nm

17 Speed sensor
- Only on vehicles with ABS

satelettronica
Protected by copyright. Copying for private or commercial purposes, in part or in whole, is not permitted unless authorised by Volkswagen AG. Volkswagen AG does not guarantee or accept any liability with respect to the correctness of information in this document. Copyright by Volkswagen AG.

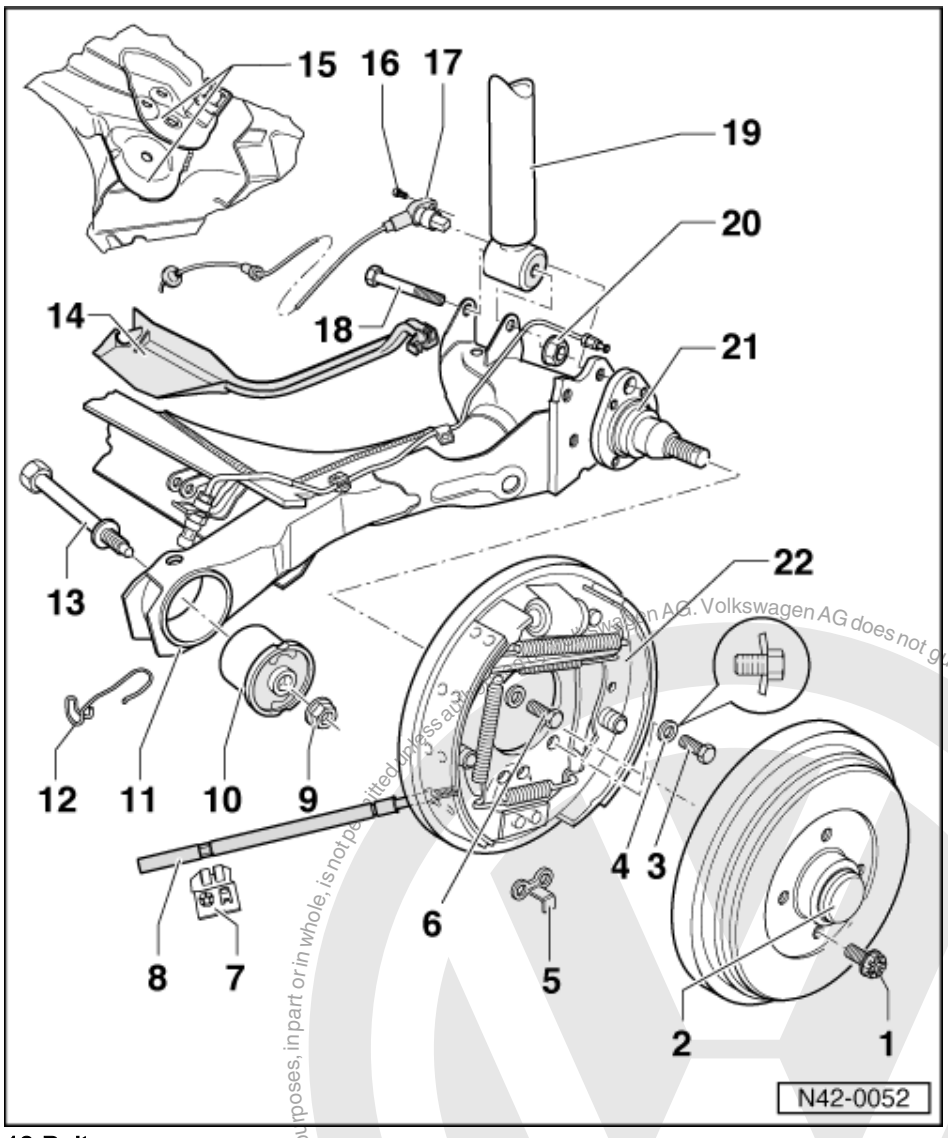

18 Bolt

16V vehicles are fitted with bolts without a centralizing point.
Bolts with centralizing points are supplied as spare parts.
If such a bolt is fitted to a 16V vehicle, the point must point towards wheel.
If this is not observed the point on the bolt may contact the exhaust silencer when the suspension extends and contracts.

19 Shock absorber

20 55 Nm

- When tightening observe the installation angle from rear axle to damper =>Fig. 1
- Renew each time after removing

21 Stub axle

- Straightening operations are not permitted!

22 Back plate with brake shoes

Protected by copyright. Copying for private and commercial purposes, in part or in whole, is not permitted unless authorised by Volkswagen AG. Volkswagen AG does not guarantee or accept any liability with respect to the correctness of information in this document. Copyright by Volkswagen AG.
satelettronica

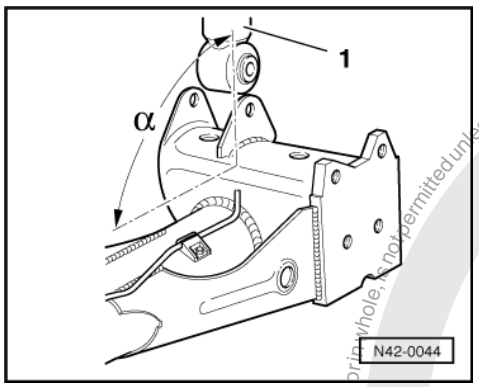

-> Fig.1 Rear axle/shock absorber installation angle

1 - Shock absorber
α - Approx. 95°

1.4 - Removing and installing bonded rubber mounting >09.99

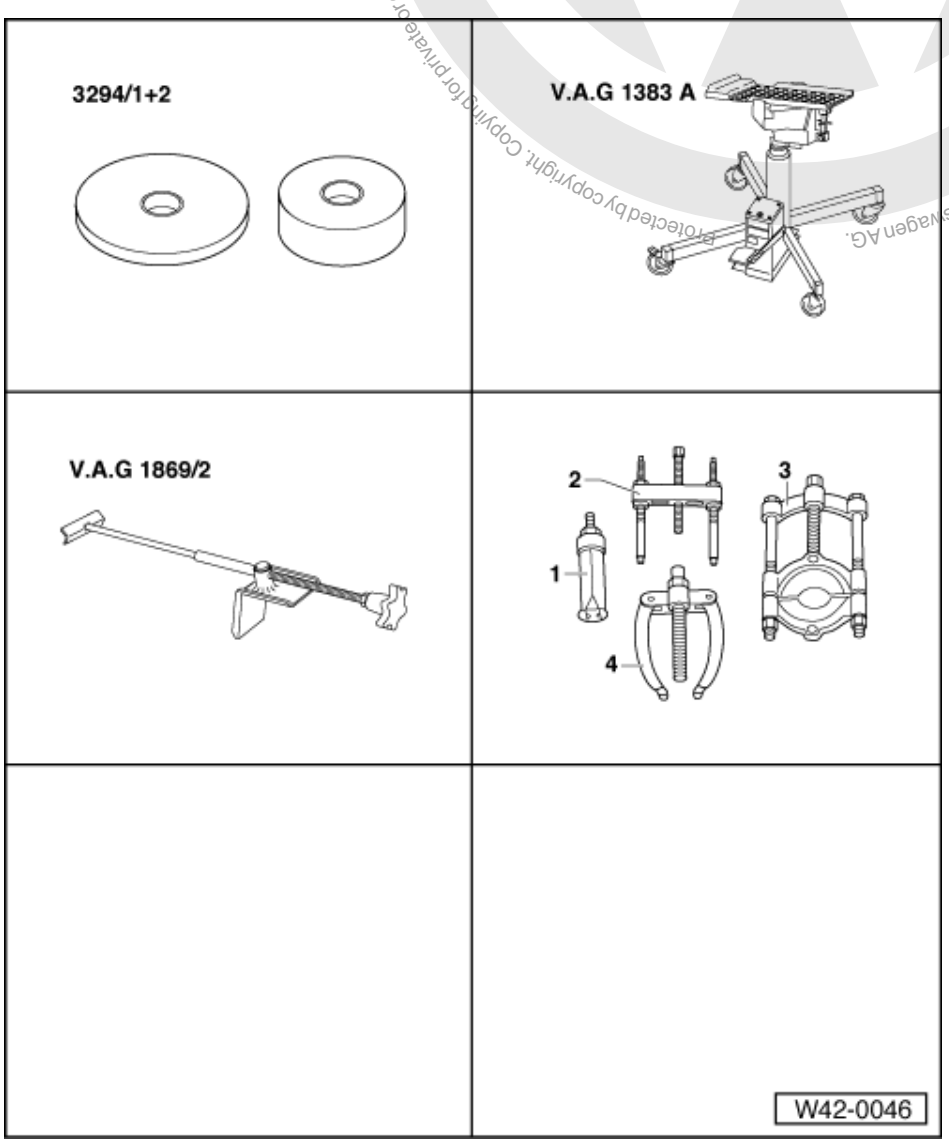

Protected by copyright. Copying for private or commercial purposes, in part or in whole, is not permitted unless authorised by Volkswagen AG. Volkswagen AG does not guarantee or accept any liability with respect to the correctness of information in this document. Copyright by Volkswagen AG.
satelettronica

Special tools and workshop equipment required

- 3294/1+2 Thrust piece
- V.A.G 1383 A Engine/gearbox jack
- V.A.G 1869/2 Brake pedal depressor
- 2 - Kukko 18/1 Bridge
- 3 - Kukko 15/1, 17/1 Separating device

Removing

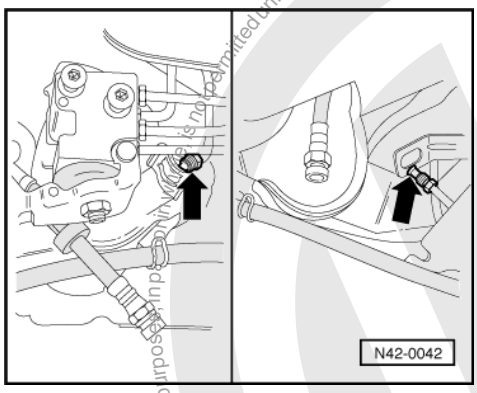

- Fit brake pedal loading device V.A.G 1869/2.

This will prevent the brake fluid draining from the brake pipes and the ABS hydraulic unit!

- Separate ABS sensor wiring at connector under rear seat, and pass through floor plate (only vehicles with ABS).
- -> Disconnect brake pipes (arrows).

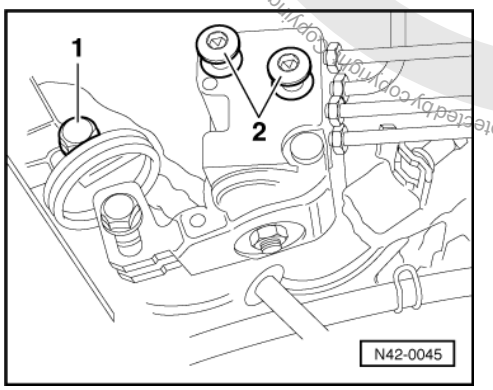

- -> Remove bolts -1- and -2- for brake pressure regulator.
- Place gearbox jack V.A.G 1383 A under.
- Remove bolts for rear axle beam.

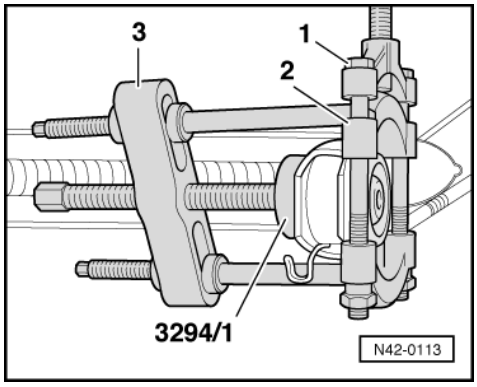

Protected by copyright. Copying for private or commercial purposes, in part or in whole, is not permitted unless authorised by Volkswagen AG. Volkswagen AG does not guarantee or accept any liability with respect to the correctness of information in this document. Copyright by Volkswagen AG.
satelettronica

- -> Pressing bonded rubber mounting out

1 - Kukko 17 - 1
2 - Kukko 15 - 1
3 - Bridge, e.g. Kukko 18/1

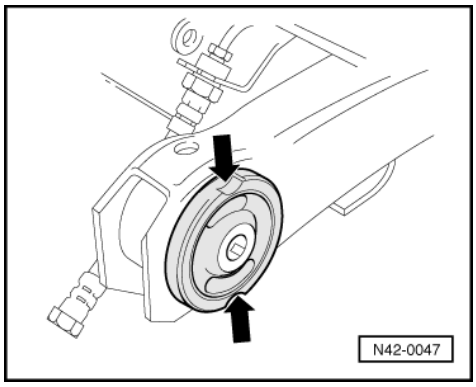

Installation position of bonded rubber mounting in rear axle beam, vehicles ‣ 06.97

-> From the start of series production the bonded rubber mounting was installed so that the kidney shaped cavities -arrows- of the bonded rubber mounting were vertical

Vehicle trials using a different installation position for the bonded rubber mounting brought about improved driving comfort.

Therefore the installation position of the bonded rubber mounting was turned through 45°from 07.97 in the series production.

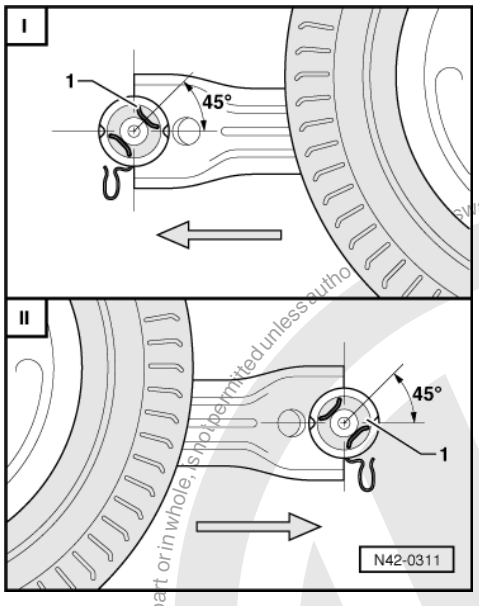

Installation position of bonded rubber mounting in rear axle beam, vehicles 07.97 ‣

I - Installation position of left-hand bonded rubber mounting

The upper kidney shaped cavity -1- is towards the rear of the vehicle

II - Installation position of right-hand bonded rubber mounting

The upper kidney shaped cavity -1- is to front of vehicle

Protected by copyright. Copying for private or commercial purposes, in part or in whole, is not permitted unless authorised by Volkswagen AG. Volkswagen AG does not guarantee or accept any liability with respect to the correctness of information in this document. Copyright by Volkswagen AG.

satelettronica

The front of the vehicle is illustrated by the arrow

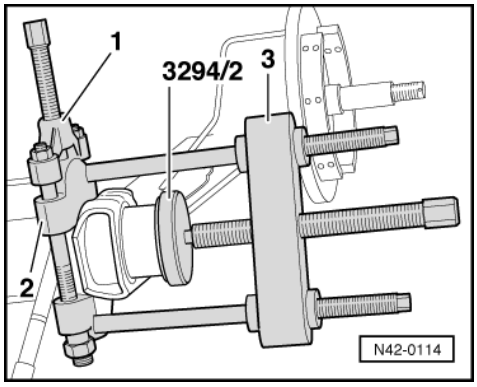

Installing

Always install the bonded rubber mounting turned through 45°! This is also valid for vehicles which were produced before 07.97.

- -> Pressing bonded rubber mounting in

  1 - Kukko 17 - 1
  2 - Kukko 15 - 1
  3 - Bridge

- Install rear axle and brake pressure regulator.
- Bleed braking system.

Protected by copyright. Copying for private or commercial purposes, in part or in whole, is not permitted unless authorised by Volkswagen AG. Volkswagen AG does not guarantee or accept any liability with respect to the correctness of information in this document. Copyright by Volkswagen AG.
satelettronica

1.5 - Assembly overview, rear axle beam 10.99 >

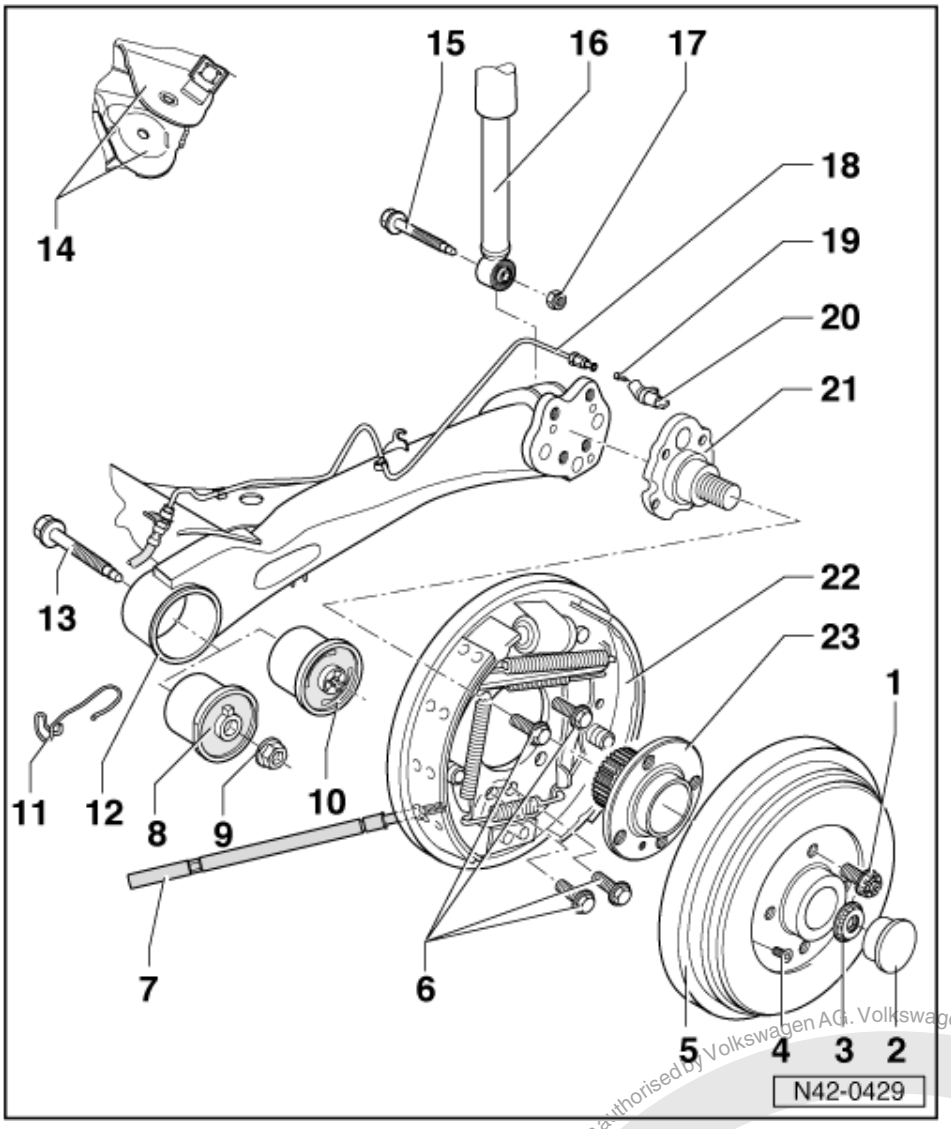

Note:

Welding and straightening work is not permitted on the axle beam and stub axle.

1 Wheel bolt, 110 Nm
2 Dust cap
- Renew each time after removing
  A perfect seal is only achieved using a new dust cap.
  Only then is an optimum function and long service life guaranteed.

3 Self-locking 12-point nut, 175 Nm
- Renew each time after removing

satelettronica
Protected by copyright. Copying for private or commercial purposes, in part or in whole, is not permitted unless authorised by Volkswagen AG. Volkswagen AG does not guarantee or accept any liability with respect to the correctness of information in this document. Copyright by Volkswagen AG.

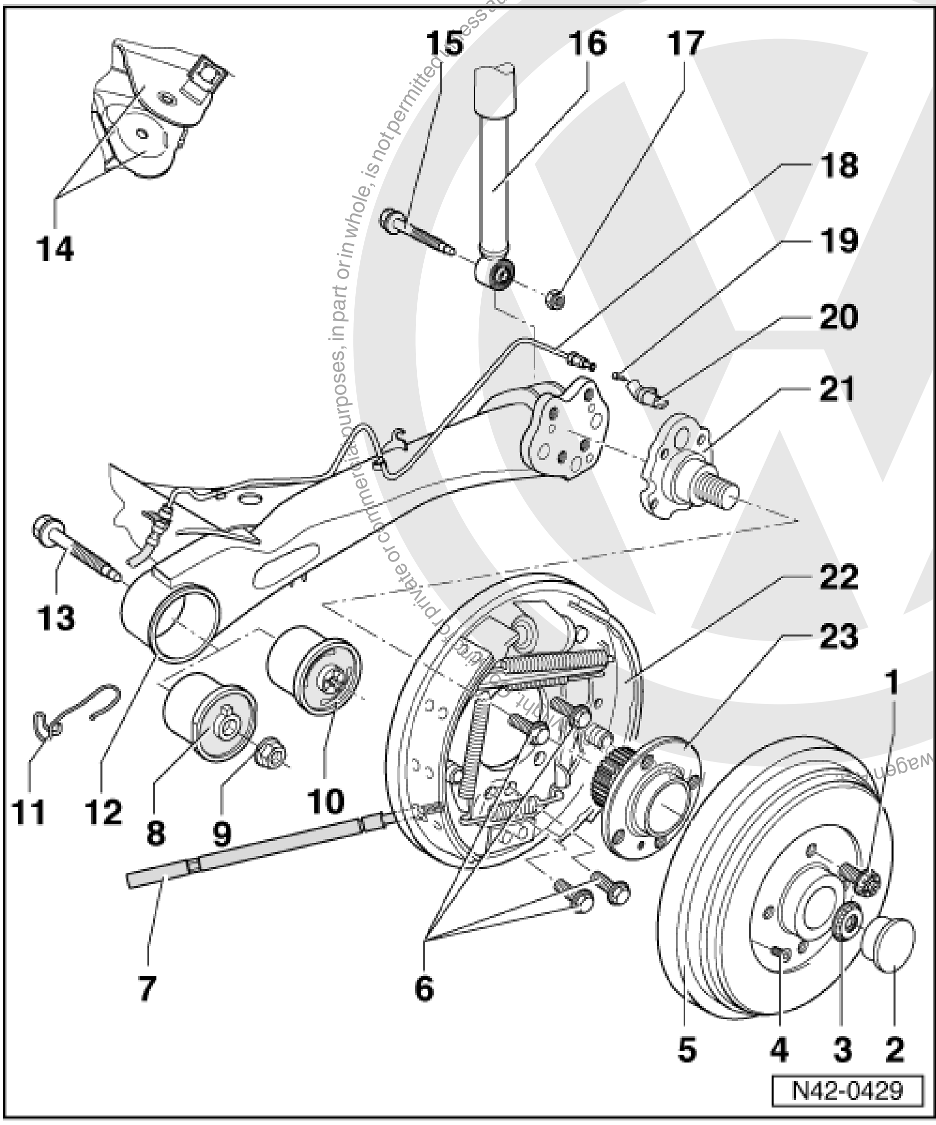

Protected by copyright. Copying for private or commercial purposes, in part or in whole, is not permitted unless authorised by Volkswagen AG. Volkswagen AG does not guarantee or accept any liability with respect to the correctness of information in this document. Copyright by Volkswagen AG.

satelettronica

4 Cross-head screw

5 Brake drum

6 Bolt with washer, 60 Nm

7 Handbrake cable

8 Bonded rubber mounting

- ◆ Removing and installing=>Page 87

9 Self-locking hexagon nut; 25 Nm and turn 90°further

- ◆ When tightening the nut the axle beam must be in the horizontal position (unladen vehicle state)
- ◆ Renew each time after removing

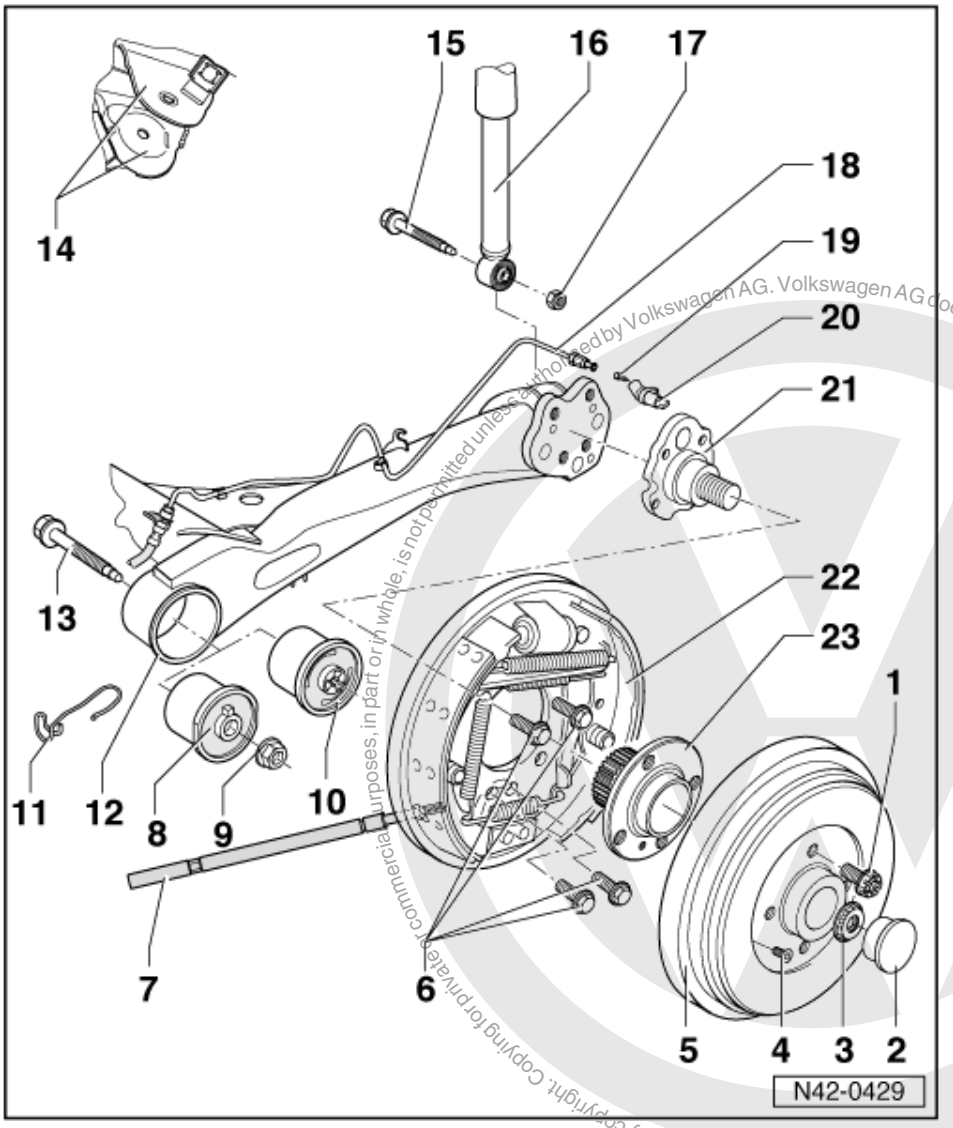

10 Hydraulic bonded rubber mounting
- Removing and installing=>Page 87

11 Handbrake cable bracket

12 Axle beam
- Stub axle contact surfaces and threaded holes are to be free of paint and dirt

13 Bolt
- Fit from centre of vehicle
- Renew each time after removing

Protected by copyright. Copying for private or commercial purposes, in part or in whole, is not permitted unless authorised by Volkswagen AG. Volkswagen AG does not guarantee or accept any liability with respect to the correctness of information in this document. Copyright by Volkswagen AG.
satelettronica

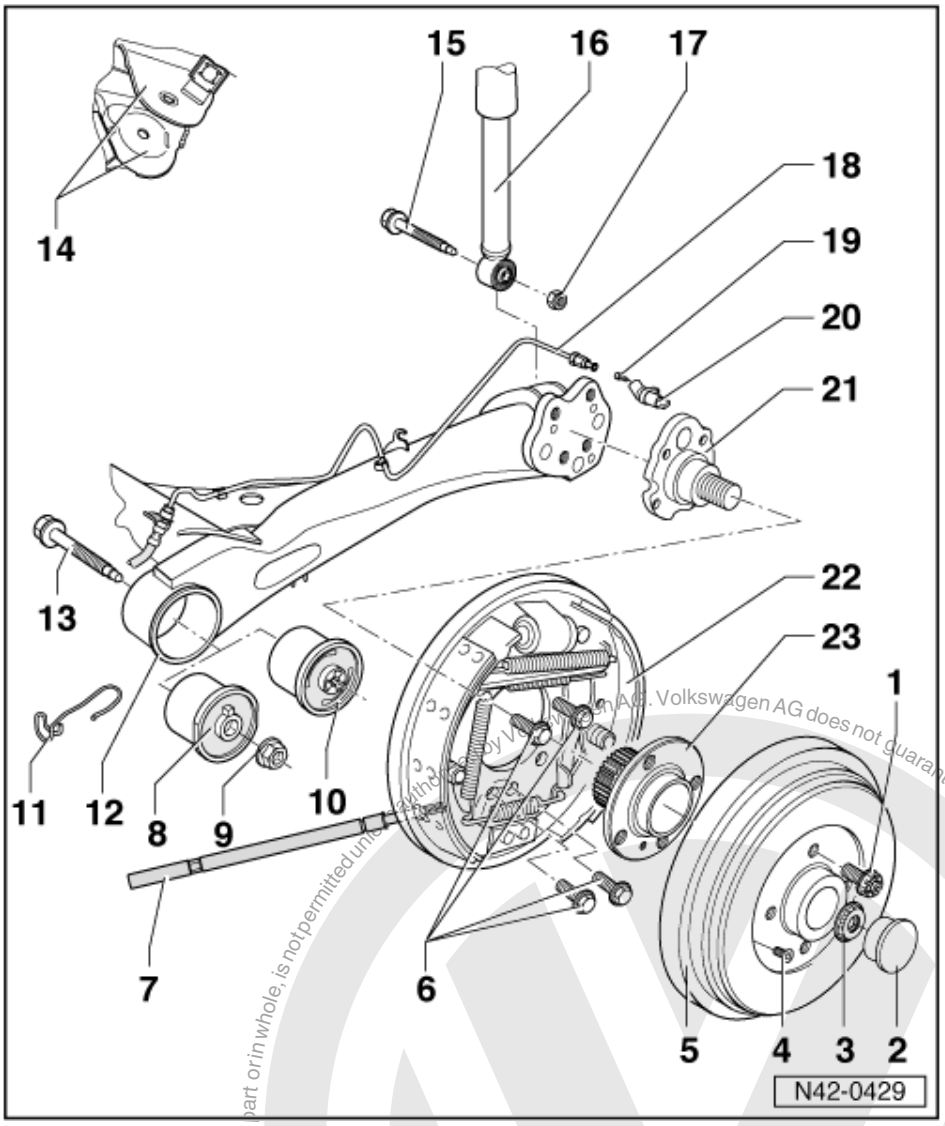

14 Rear axle bearing bracket
15 Bolt
16 Shock absorber
17 Self-locking hexagon nut; 40 Nm and turn 90°further
- When tightening observe the installation angle from rear axle to damper =>Fig. 1
- Renew each time after removing

18 Brake pipe
19 Hexagon socket head bolt, 8 Nm
20 Speed sensor
- Only on vehicles with ABS

Protected by copyright. Copyright by Volkswagen AG.
Volkswagen AG does not guarantee or accept any liability with respect to the correctness of information in this document.
satelettronica

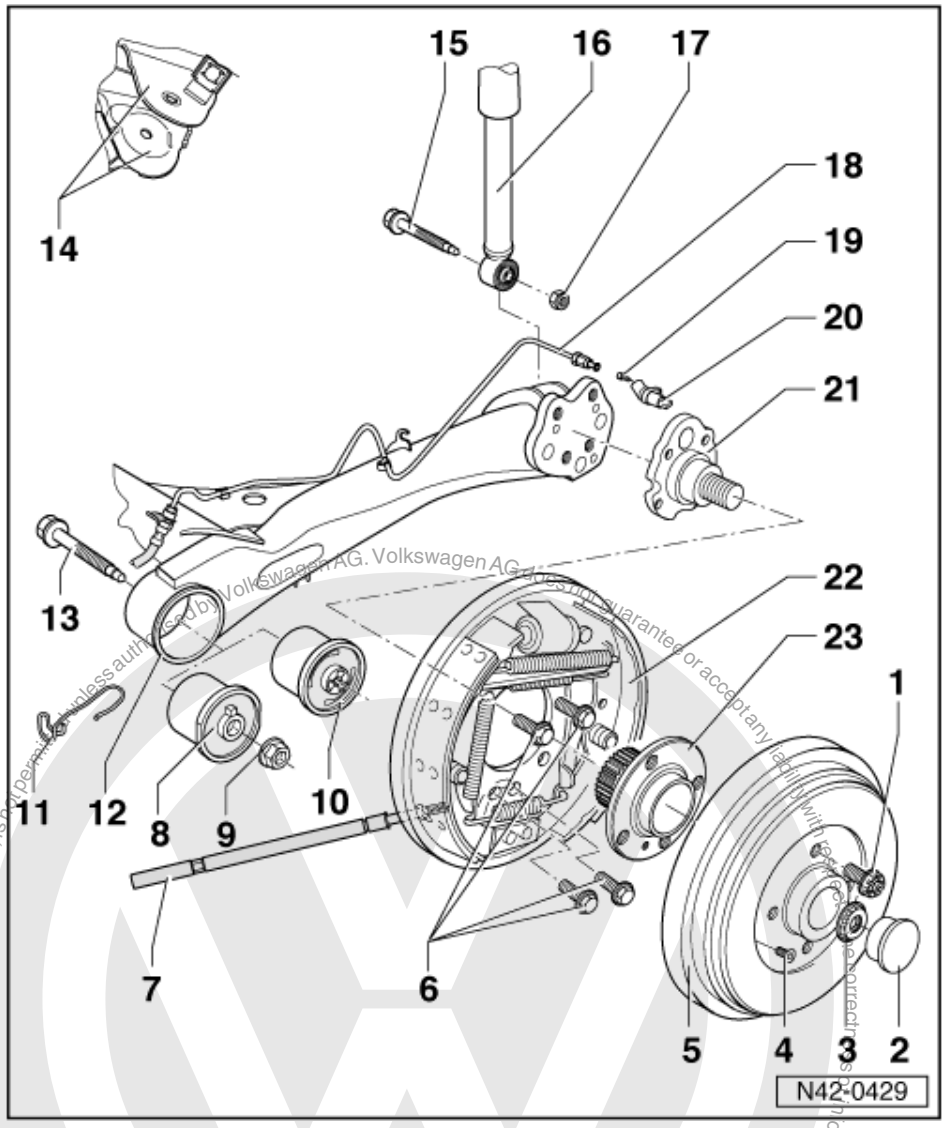

21 Stub axle

- Straightening operations are not permitted!
- Recutting the thread is not permitted!

22 Back plate with brake shoes

- Servicing

=> Brake system; Repair group 46

23 Wheel hub with wheel bearings

The wheel bearing and wheel hub are installed together in a housing.

This wheel bearing/hub unit is maintenance and adjustment free. Adjusting and servicing is not possible!

1.6 - Removing and installing bonded rubber mounting/hydraulic bonded rubber mounting 10.99>

The bonded rubber mounting cannot be pressed out and in with workshop equipment.

satelettronica

If the bonded rubber mounting is defective, the rear axle beam must be replaced.
The rear axle beam is supplied as spare part with fitted bonded rubber mountings.

1.7 - Assembly overview suspension strut

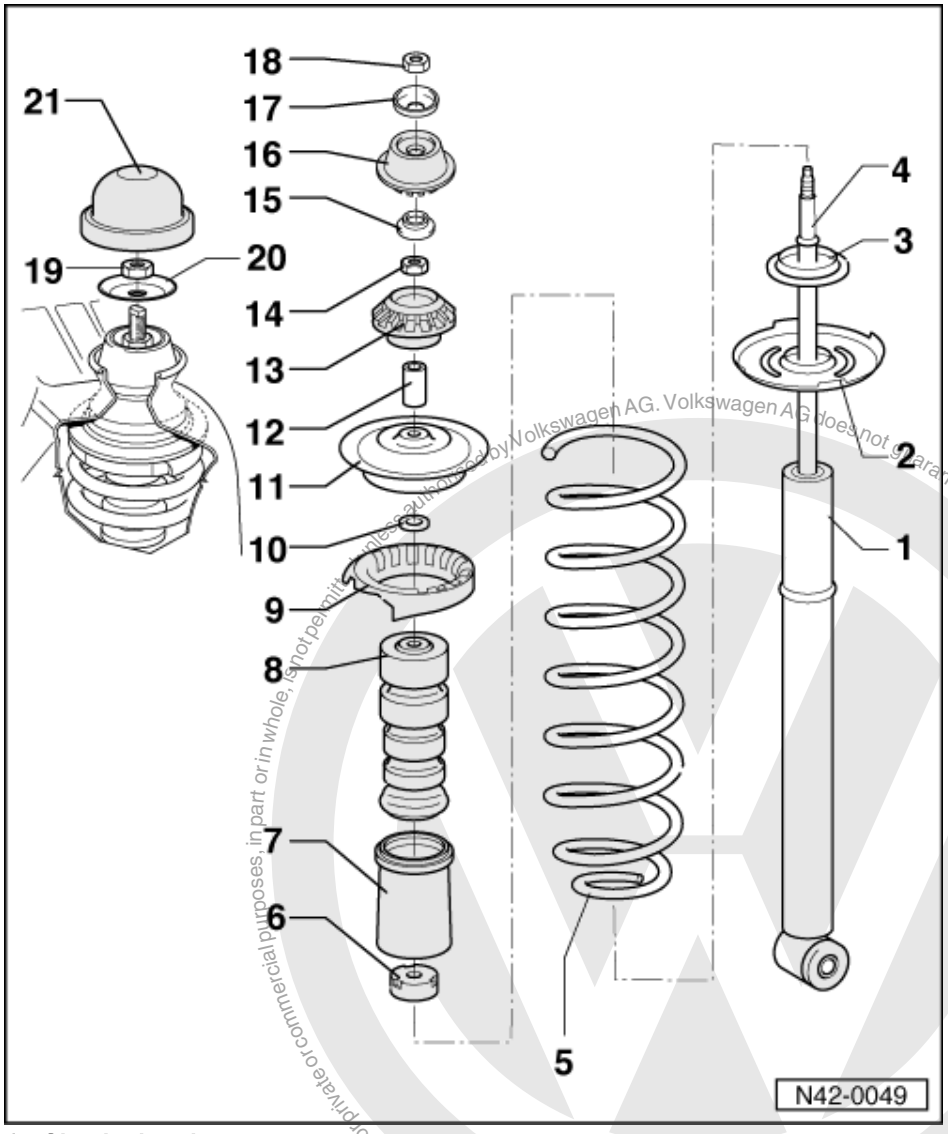

1 Shock absorber
- Can be renewed individually
- Allocation

=> Replacement parts catalogue
- Disposal

=> Special Information Running gear No. 2
- Checking shock absorber for leaks and noises

=> Special Information Running gear No. 17

2 Lower spring plate
3 Packing
4 Piston rod with circlip

Protected by copyright. Copying for private or commercial purposes, in part or in whole, is not permitted unless authorised by Volkswagen AG. Volkswagen AG does not guarantee or accept any liability with respect to the correctness of information in this document. Copyright by Volkswagen AG.
satelettronica

Copyright by Volkswagen AG. Volkswagen AG does not guarantee or accept any liability with respect to the correctness of information in this document. Copying for private or commercial purposes, in part or in whole, is not permitted unless authorised by Volkswagen AG.

5 Coil spring
- Can be removed and installed without spring tensioning device
- Allocation

=> Replacement parts catalogue
6 Protective cap
7 Protective tube

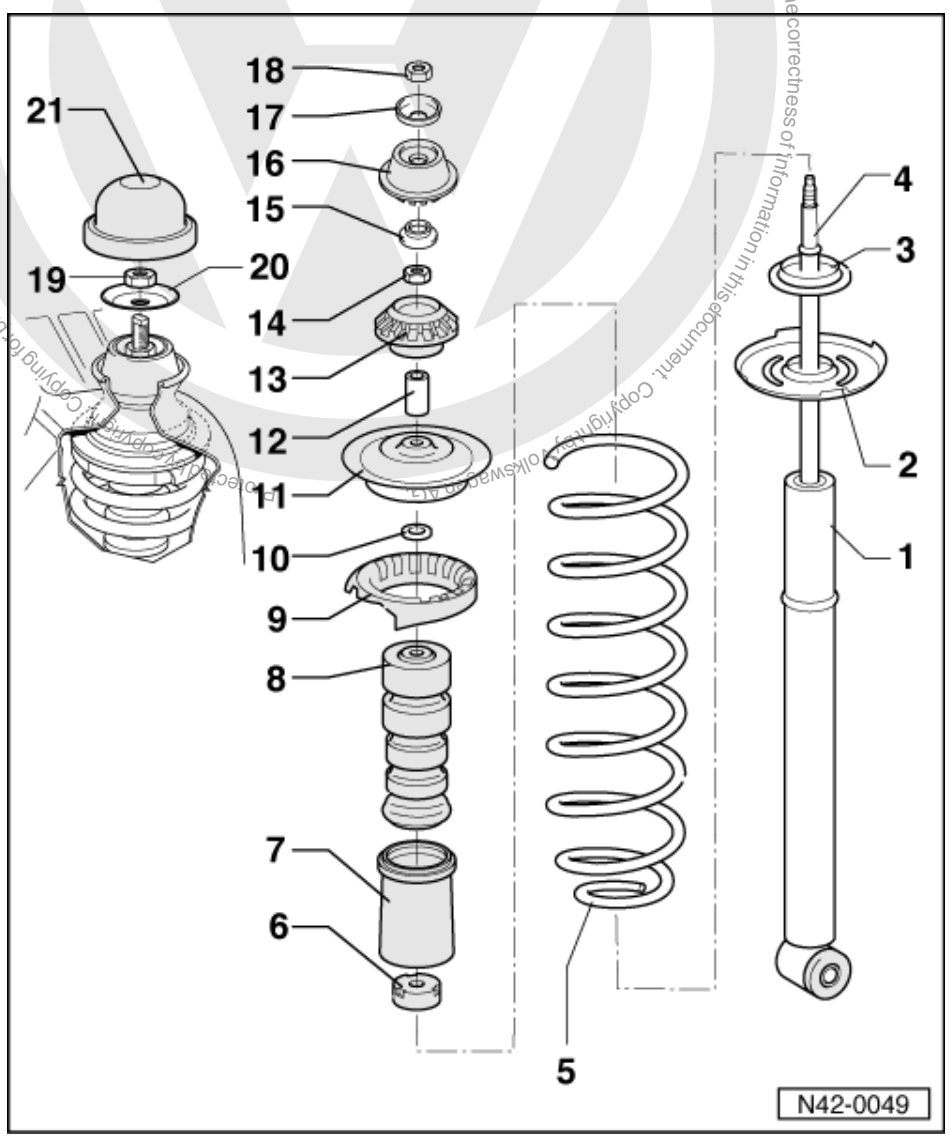

8 Stop buffer
9 Spring seat
- Installation position => Fig.1

10 Washer
11 Upper spring plate
12 Spacer tube
13 Lower mounting ring
- Rubber item

14 20 Nm
15 Cover (small)
16 Upper mounting ring (rubber)
17 Cover (large)
18 20 Nm

satelettronica

19 20 Nm
20 Dished washer
21 Cover

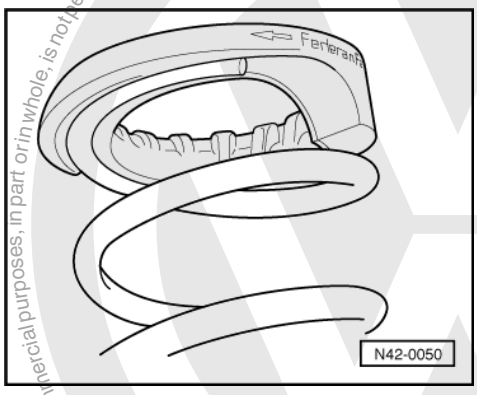

Protected by copyright. Copying for private or commercial purposes, in part or in whole, is not permitted unless authorised by Volkswagen AG. Volkswagen AG does not guarantee or accept any liability with respect to the correctness of information in this document. Copyright by Volkswagen AG.

satelettronica

-> Fig.1 Installation position of spring seat

2 - Servicing wheel bearings

2.1 - Servicing wheel bearings

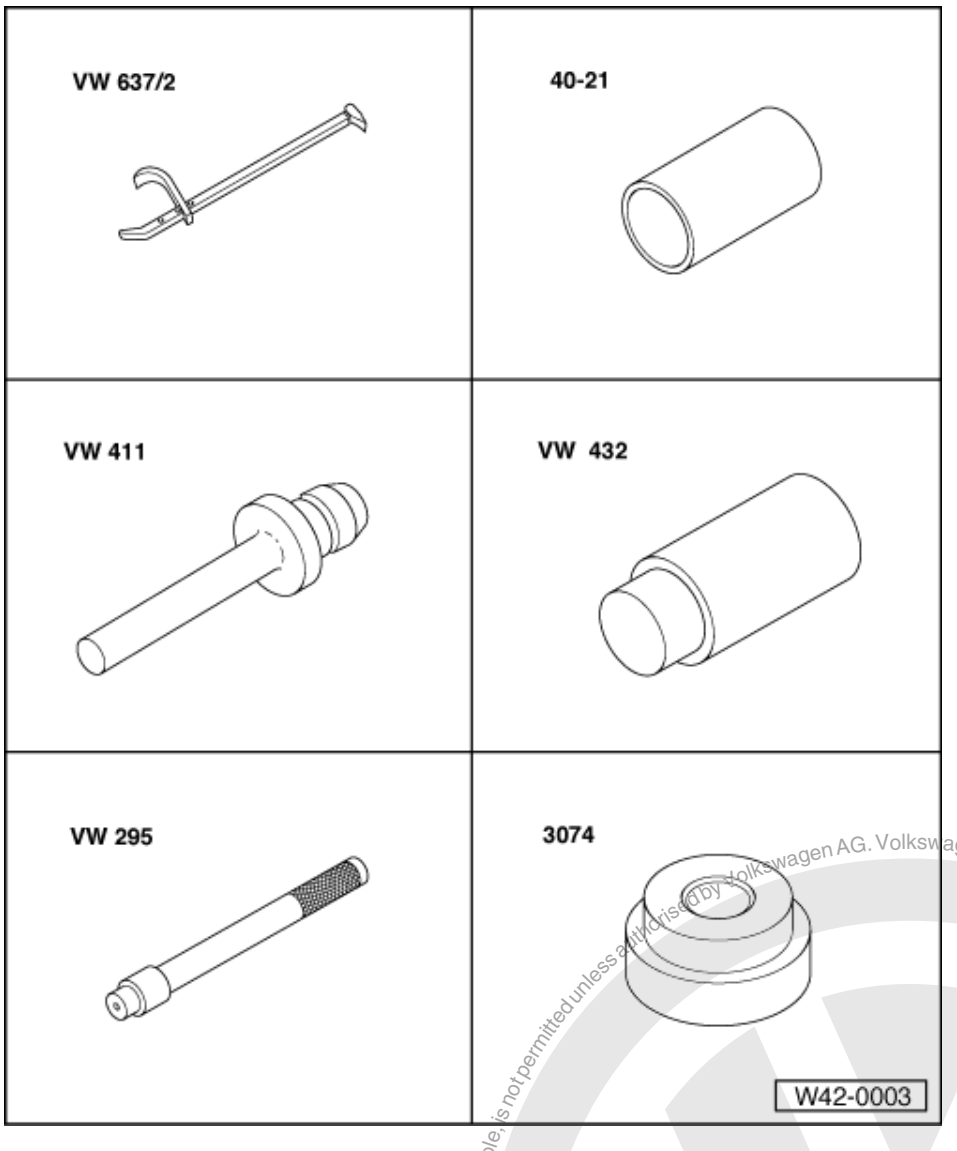

Special tools and workshop equipment required

- VW 637/2 Hub cap puller
- 40-21 Tube
- VW 411 Press tool
- VW 432 Press piece
- VW 295 Drift
- 3074 Press disc

satelettronica
Protected by copyright. Copying for private or commercial purposes, in part or in whole, is not permitted unless authorised by Volkswagen AG. Volkswagen AG does not guarantee or accept any liability with respect to the correctness of information in this document. Copyright by Volkswagen AG.

Special tools and workshop equipment required

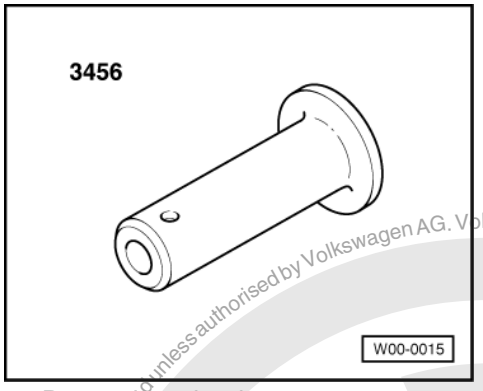

- Press piece 3456

2.2 - Assembly overview wheel bearings, drum brakes>09.99

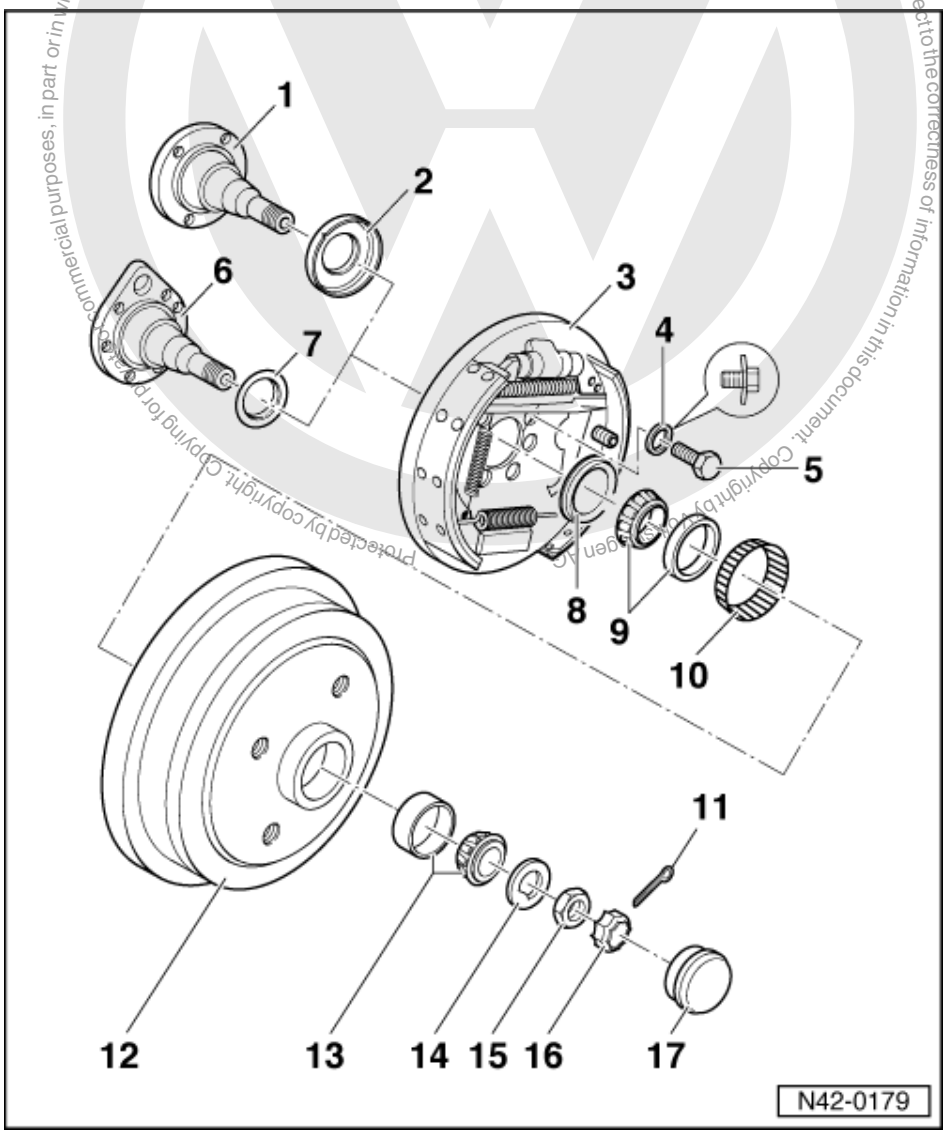

Protected by copyright. Copying for commercial purposes, in part or in whole, is not permitted unless authorised by Volkswagen AG. Volkswagen AG does not guarantee or accept any liability with respect to the correctness of information in this document. Copyright by Volkswagen AG.

satelettronica

Notes:

Careful sealing, absolute cleanliness and precise adjustment are prerequisites for long wheel bearing service life. Therefore note the following points:

- Install oil seal and grease cap as shown.
- Only reinstall clean bearings, do not wash bearings.
- Adjust wheel bearing play carefully.

1 Stub axle for vehicles without ABS
- Straightening operations are not permitted!

2 Cover ring
- Not introduced in Polo

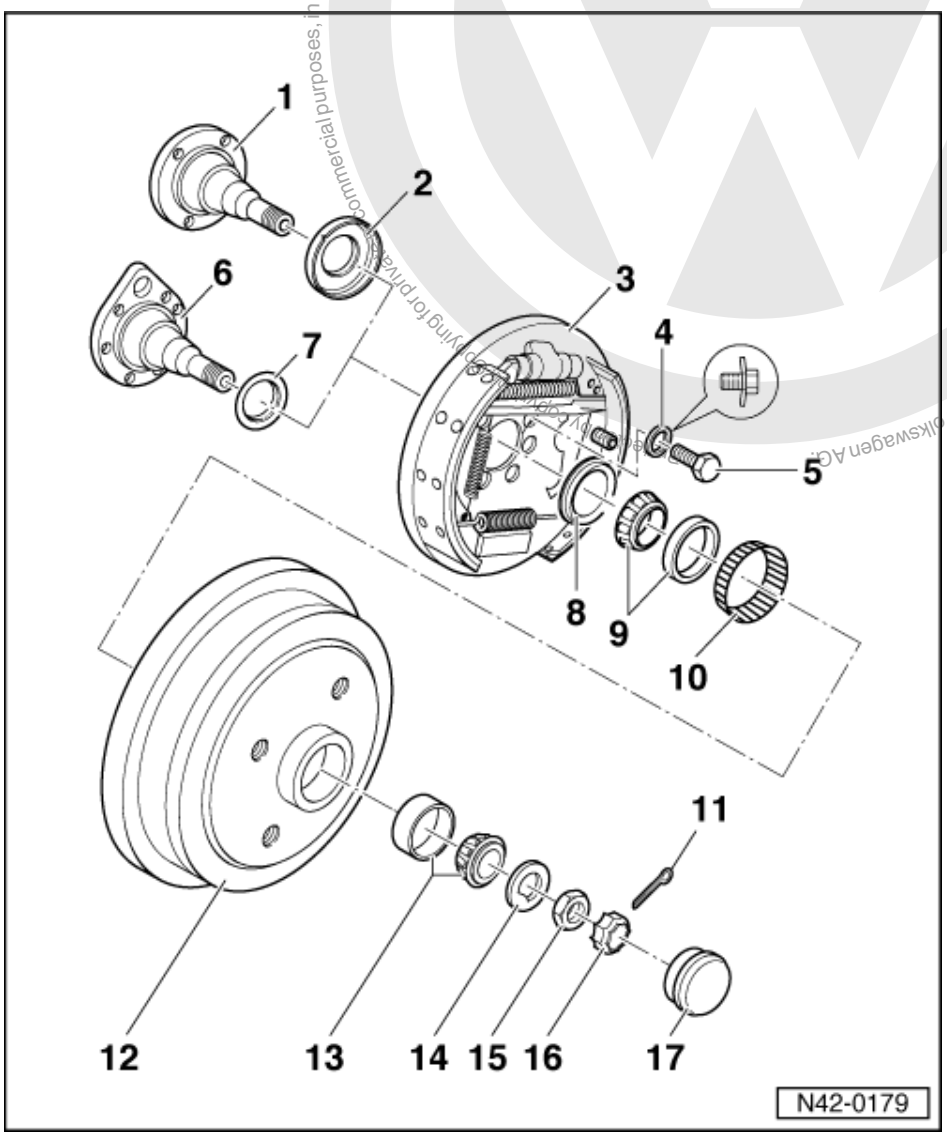

3 Brake backplate
- Bolt together with stub axle onto rear axle

4 Dished washer
- Larger contact surface (concave side) to brake backplate

5 Hexagon bolt, 60 Nm

6 Stub axle for vehicles with ABS
- Straightening operations are not permitted!

7 Cover ring

satelettronica

Introduction: from 03.97
- Driving in => Fig. 10

8 Oil seal
- Fill between sealing lips with multi-purpose grease.
- Driving in =>Fig. 8

9 Inner wheel bearing
- Drive out outer race with copper drift
- Pressing in =>Fig. 7

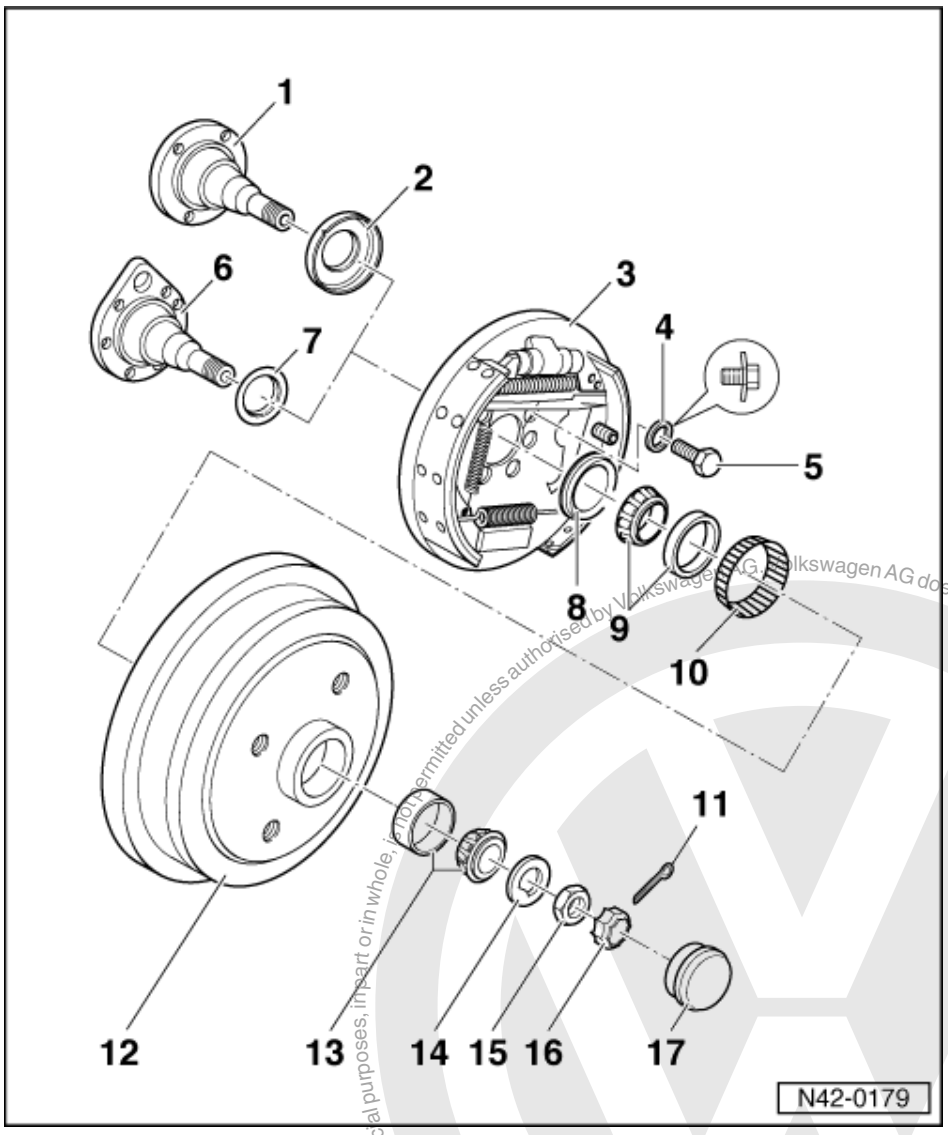

10 Rotor
- Only on vehicles with ABS
- Pressing on =>Fig. 9

11 Split pin
- Renew

12 Brake drum
- Before removing release brake shoe adjustment through wheel bolt hole => Fig. 5
- When removing the brake drum ensure that the outer wheel bearing does not fall out.
- Fill hub with multi-purpose grease before installing

13 Outer wheel bearing
- Drive out outer race with copper drift

Protected by copyright. Copying for private or commercial purposes, in part or in whole, is not permitted unless authorised by Volkswagen AG. Volkswagen AG does not guarantee or accept any liability with respect to the correctness of information in this document. Copyright by Volkswagen AG.
satelettronica

- Pressing in => Fig. 6

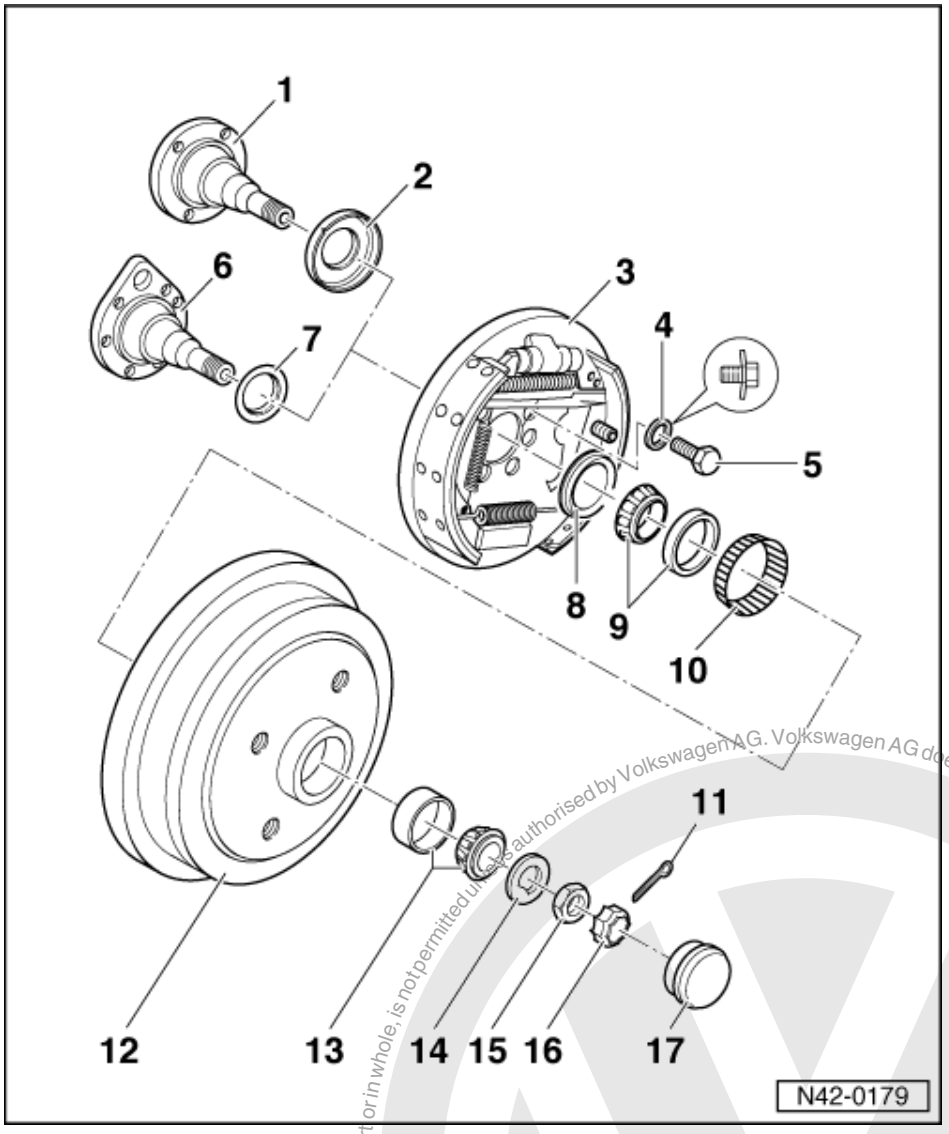

14 Thrust washer

15 Hexagon nut

- Adjusting wheel bearing play => Fig. 4

16 Locking ring

17 Grease cap

- Pressing off => Fig. 1 and 2
- Driving in => Fig. 3

Protected by copyright. Copying for private or commercial purposes, in part or in whole, is not permitted unless authorised by Volkswagen AG. Volkswagen AG does not guarantee or accept any liability with respect to the correctness of information in this document. Copyright by Volkswagen AG.
satelettronica

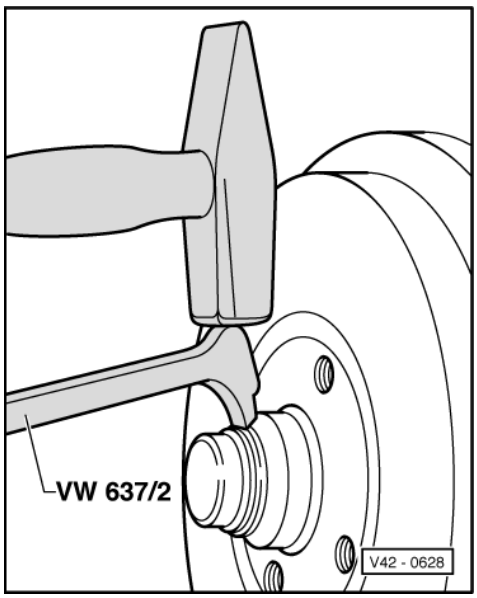

-> Fig.1 Pressing off grease cap

Loosen grease cap from seat by tapping lightly on the claw.

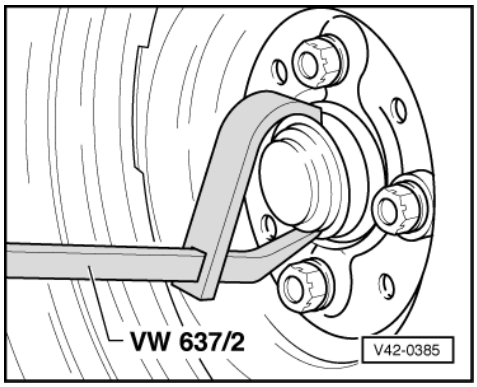

-> Fig.2 Pressing off grease cap

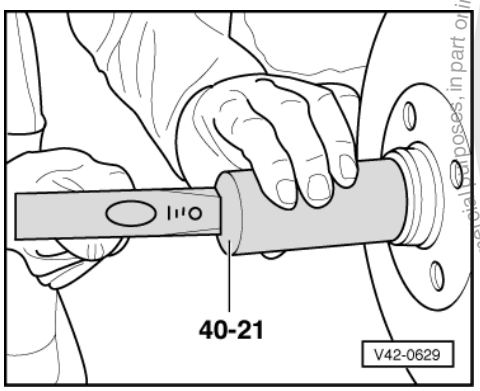

-> Fig.3 Driving in grease cap

Notes:

- Always renew damaged (dented) grease caps.

Protected by copyright. Copying for private or commercial purposes, in part or in whole, is not permitted unless authorised by Volkswagen AG. Volkswagen AG does not guarantee or accept any liability with respect to the correctness of information in this document. Copyright by Volkswagen AG.
satelettronica

- Damaged (dented) grease caps allow ingress of moisture, therefore always use the illustrated tool.

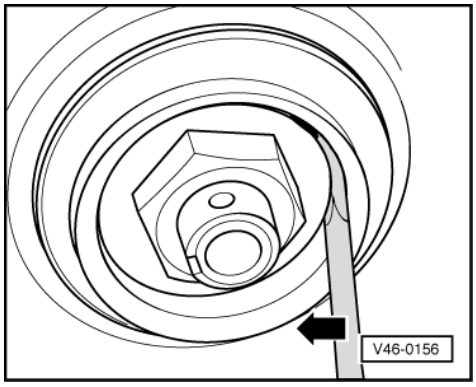

-> Fig.4 Adjusting wheel bearing play

Note:

Using a screwdriver it must be possible to move the thrust washer by finger pressure (without leverage).

- Secure with locking ring and new split pin.

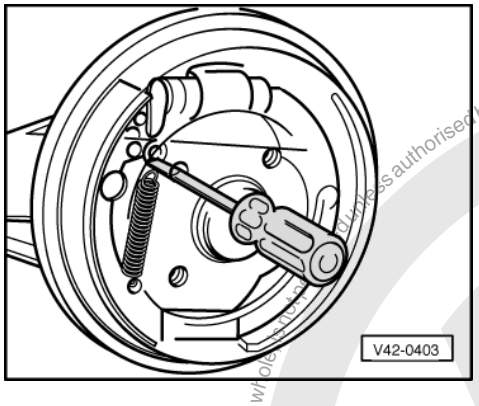

-> Fig.5 Releasing brake shoe adjustment

- Insert a screwdriver through a hole in the brake drum and push the wedge upwards.

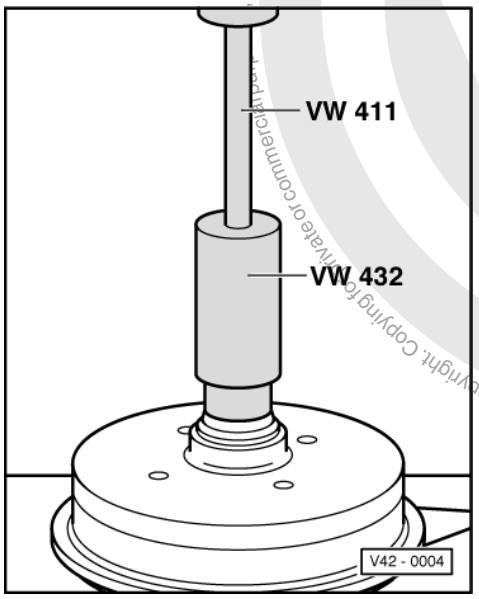

Protected by copyright. Copying for private or commercial purposes, in part or in whole, is not permitted unless authorised by Volkswagen AG. Volkswagen AG does not guarantee or accept any liability with respect to the correctness of information in this document. Copyright by Volkswagen AG.
satelettronica

Protected by copyright. Copying for commercial purposes, in part or in whole, is not permitted unless authorised by Volkswagen AG. Volkswagen AG does not guarantee or accept any liability with respect to the correctness of information in this document. Copyright by Volkswagen AG.

-> Fig.6 Pressing in outer wheel bearing outer race

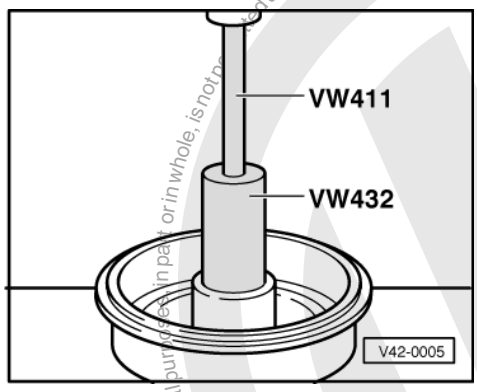

-> Fig.7 Pressing in inner wheel bearing outer race

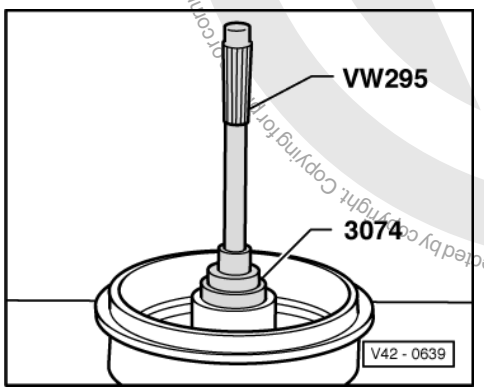

-> Fig.8 Driving in oil seal

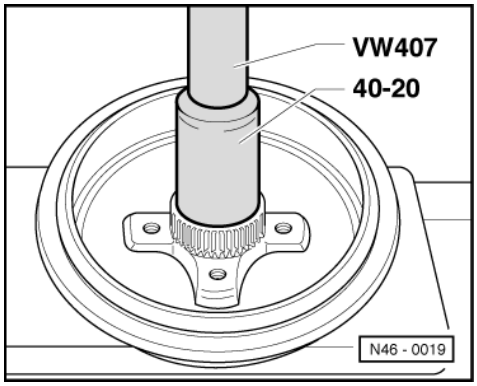

-> Fig.9 Pressing rotor in

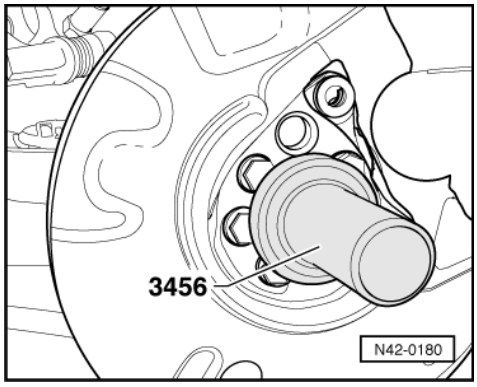

satelettronica

-> Fig.10 Driving in cover ring

2.3 - Assembly overview wheel bearings, disc brakes>09.99

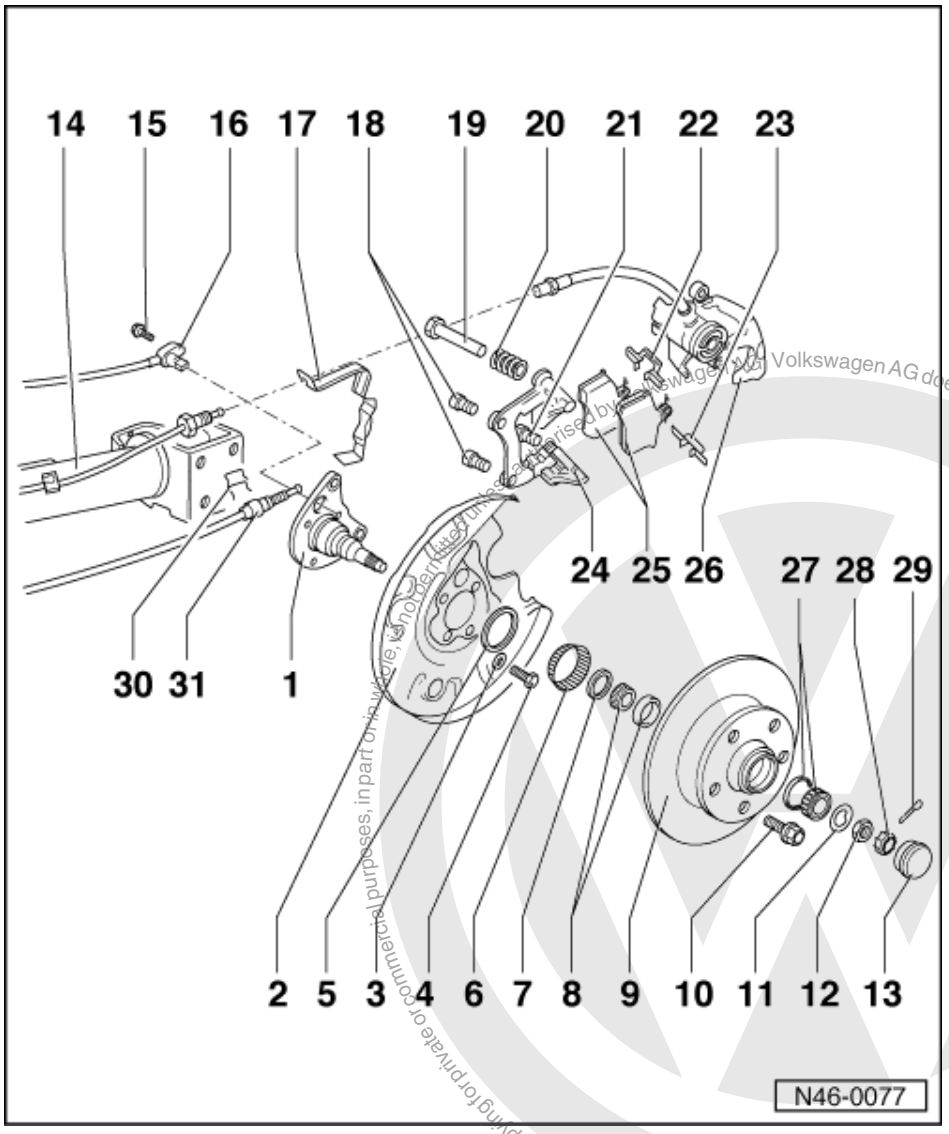

Notes:

Careful sealing, absolute cleanliness and precise adjustment are prerequisites for long wheel bearing service life. Therefore note the following points:

- Install oil seal and grease cap as shown.
- Only reinstall clean bearings, do not wash bearings.
- Adjust wheel bearing play carefully.

1 Stub axle
2 Backplate
3 Dished spring washer
- Larger seating surface towards backplate

satelettronica

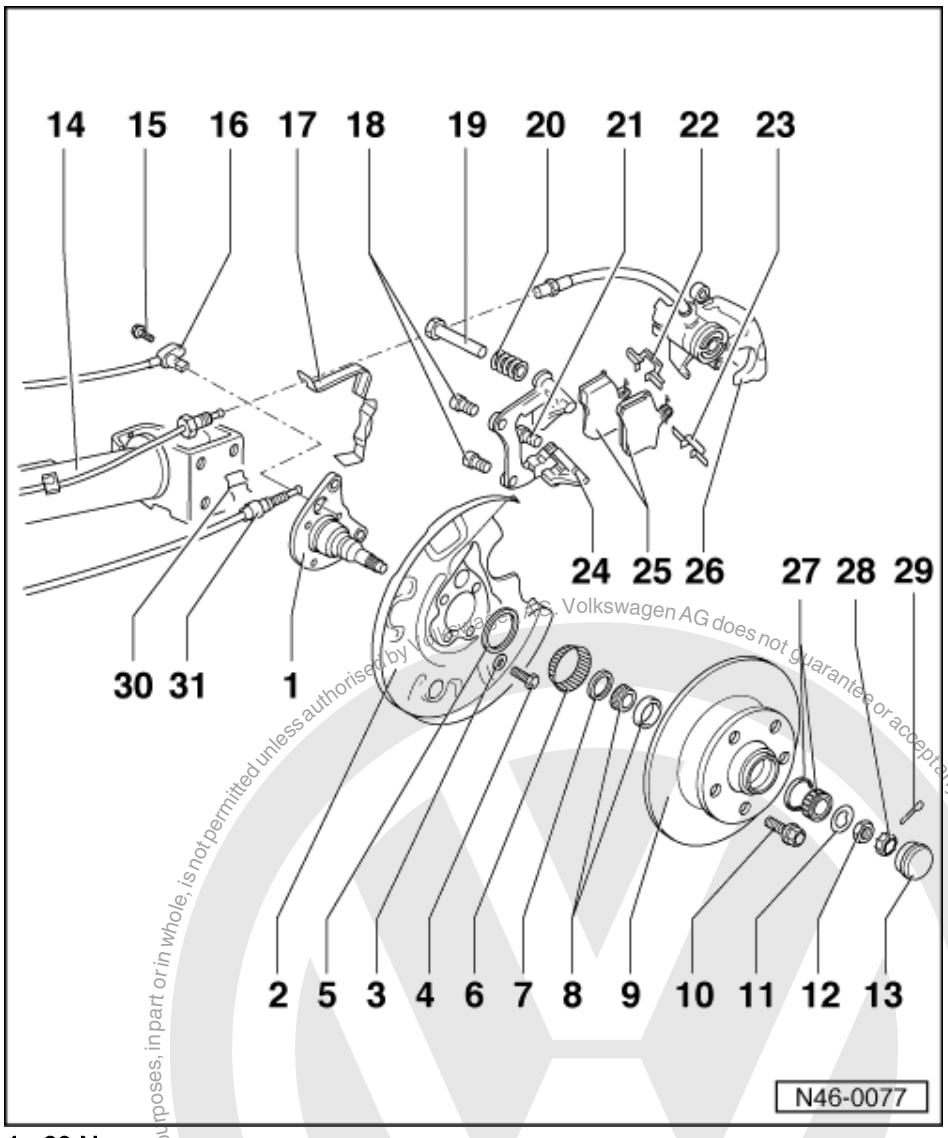

4 60 Nm
5 Backplate ring
Introduction: from 03.97
- Driving in => Fig. 8

6 Speed sensor rotor
- Insert drift through wheel bolt holes and drive off
- Drive on with suitable sleeve

7 Seal
8 Inner wheel bearing
9 Brake disc
- Thickness 10 mm
- Wear limit 8 mm
- When worn, always renew both sides

10 110 Nm
11 Thrust washer
12 Hexagon nut
- Adjusting wheel bearing play
=> Page 105
- Secure with locking ring and new split pin

Copyright by Volkswagen AG. Protected by copyright. Copying for private or commercial purposes, in part or in whole, is not permitted unless authorised by Volkswagen AG. Volkswagen AG does not guarantee or accept any liability with respect to the correctness of information in this document.
satelettronica

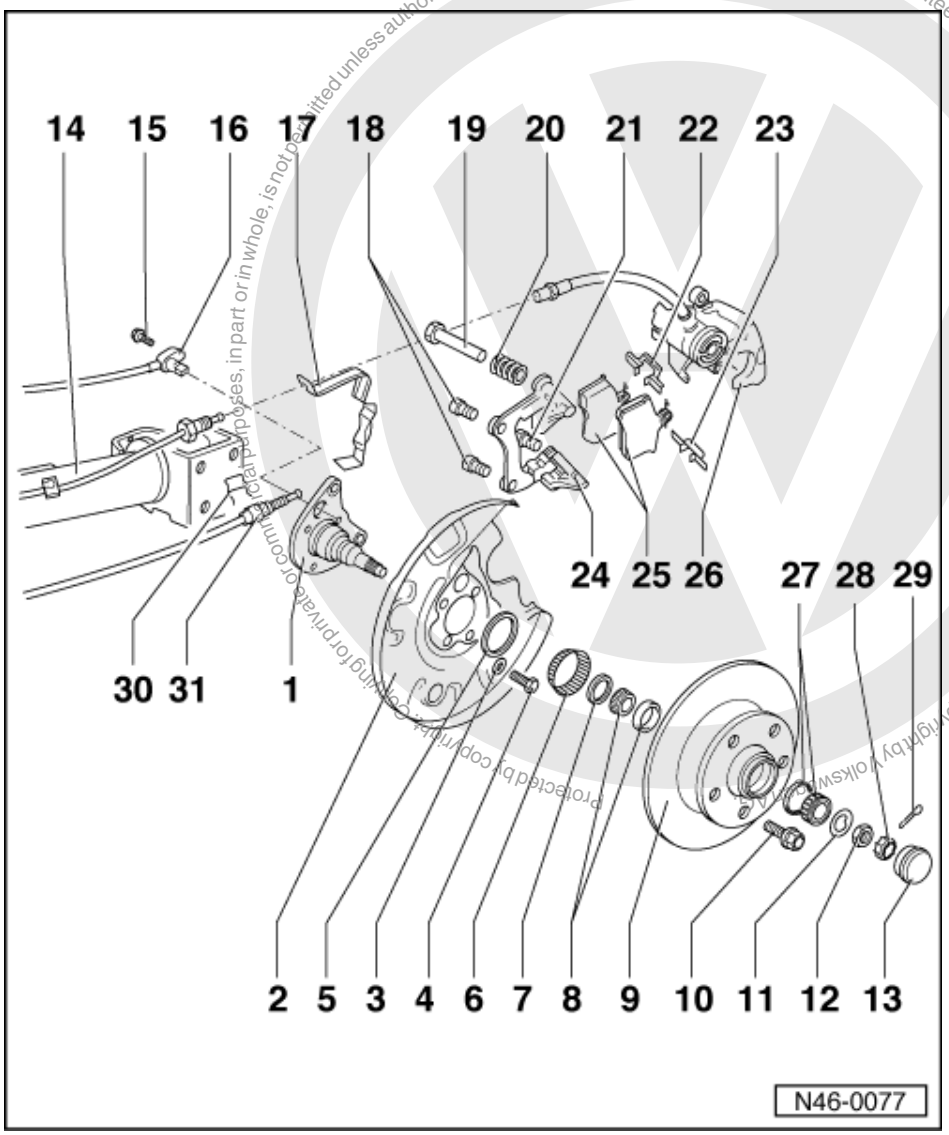

13 Grease cap
- Pressing off => Fig. 1 and 2
- Driving in => Fig. 3

14 Axle beam

15 Hexagon socket head bolt, 10 Nm

16 ABS speed sensor
- Before inserting sensor, clean mounting hole inner surface and coat with lubricating paste G 000 650

17 Brake hose bracket

18 65 Nm

19 Guide pin

20 Protective cap

21 Self-locking bolt, 35 Nm
- Renew
- When loosening and tightening counter hold on guide pin

Protected by copyright. Copying for private or commercial purposes, in part or in whole, is not permitted unless authorised by Volkswagen AG. Volkswagen AG does not guarantee or accept any liability with respect to the correctness of information in this document. Copyright by Volkswagen AG.
satelettronica

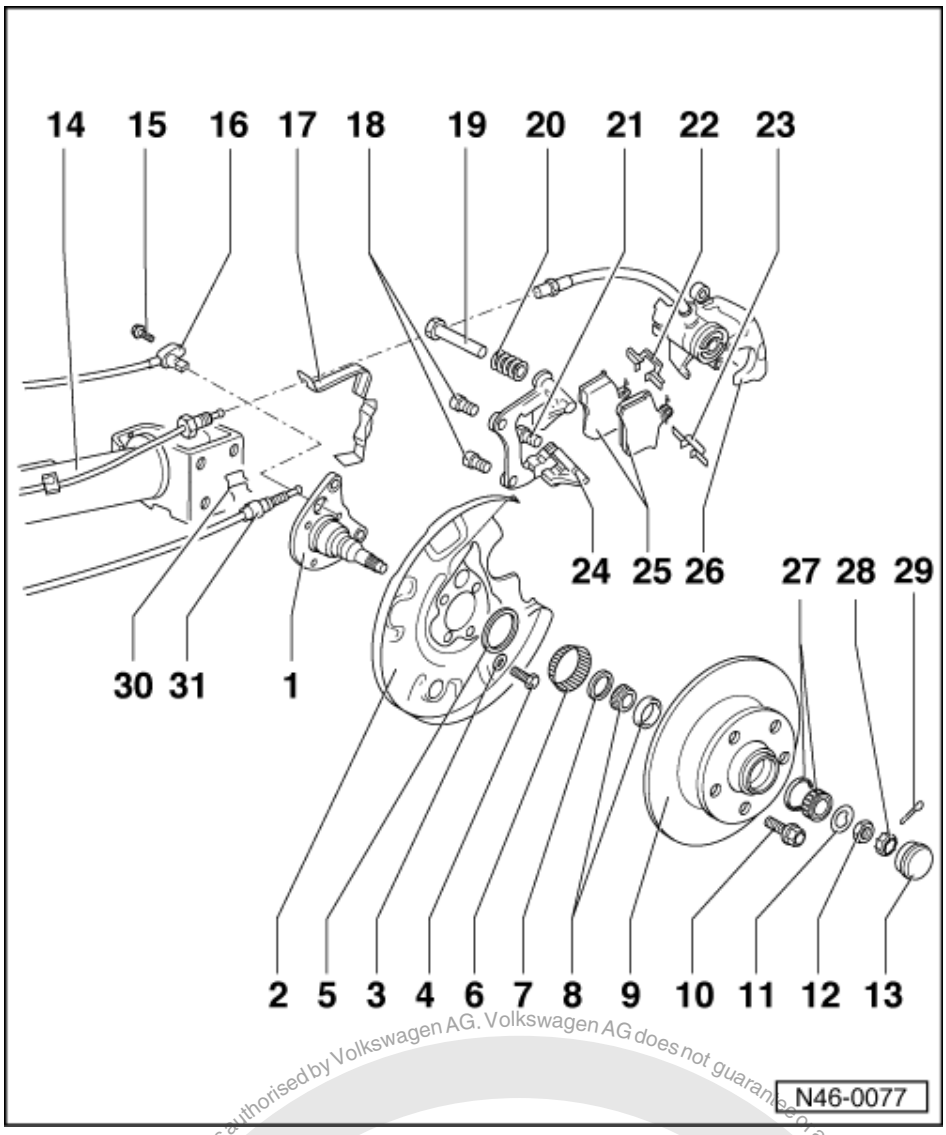

22 Upper pad retaining spring
- Renew when changing pads

23 Lower pad retaining spring
- Renew when changing pads

24 Brake carrier with guide pins and protective cap
- If protective caps or guide pins are damaged use repair kit. Use grease sachet supplied to lubricate guide pins.

25 Brake pads
- Thickness 12 mm
- Checking thickness:

=> Maintenance manual

- Always renew both sides
- Removing and installing

=> Brake system; Repair group 46; Servicing rear brakes (disc brakes) Servicing rear brakes (disc brakes)

Protected by copyright. Copying for private or commercial purposes, in part or in whole, is not permitted unless authorised by Volkswagen AG. Volkswagen AG does not guarantee or accept any liability with respect to the correctness of information in this document. Copyright by Volkswagen AG
satelettronica

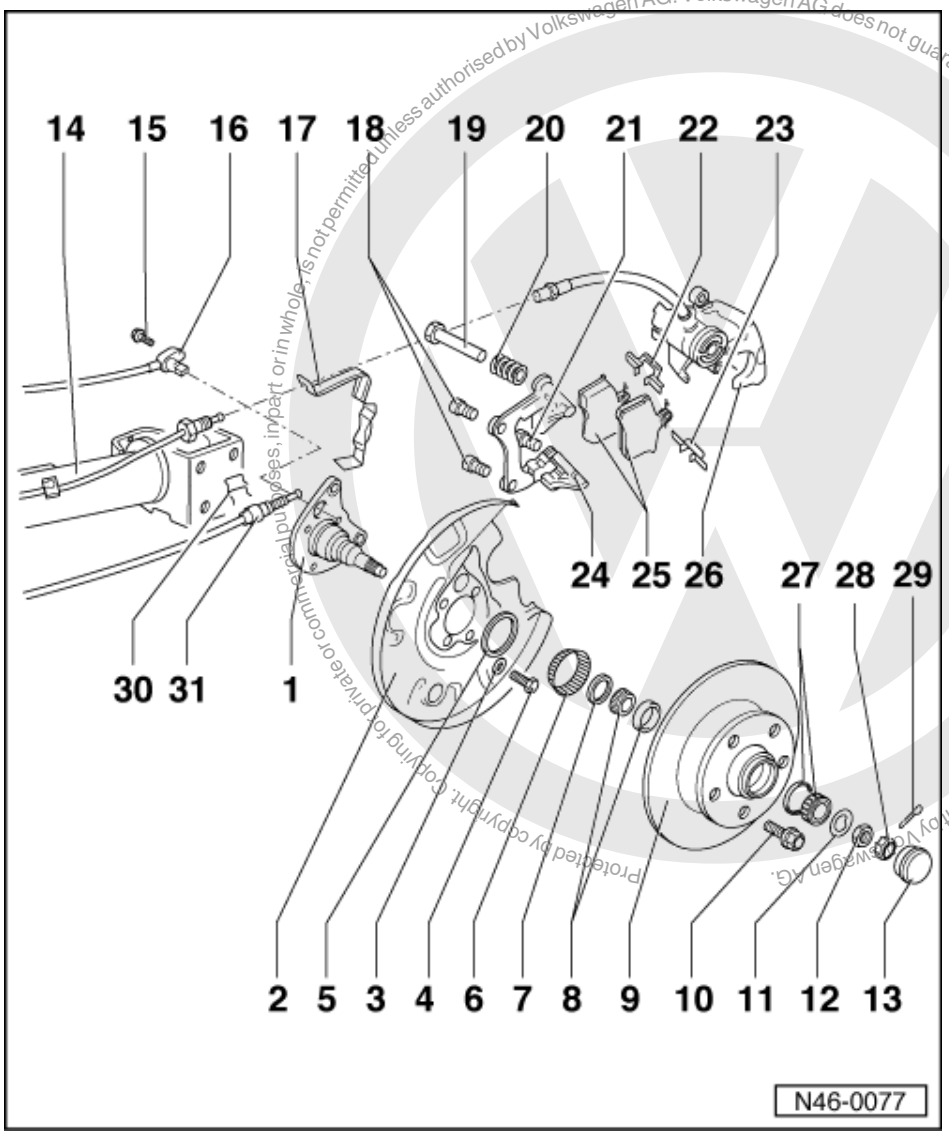

Protected by copyright. Copying for private or commercial purposes, in part or in whole, is not permitted unless authorised by Volkswagen AG. Volkswagen AG does not guarantee or accept any liability with respect to the correctness of information in this document. Copyright by Volkswagen AG.

satelettronica

26 Brake caliper
- Servicing

=> Brake system; Repair group 46; Servicing rear brakes (disc brakes) Servicing rear brakes (disc brakes)

- Adjust handbrake cable first after maintenance or replacement.
  The footbrake must not be operated first!
- Adjusting handbrake

=> Brake system; Repair group 46; Servicing rear brakes (disc brakes) Servicing rear brakes (disc brakes)

27 Outer wheel bearing
28 Locking ring
29 Split pin
30 Spring clip
31 Handbrake cable
- Adjusting handbrake

=> Brake system; Repair group 46; Servicing rear brakes (disc brakes) Servicing rear brakes (disc brakes)

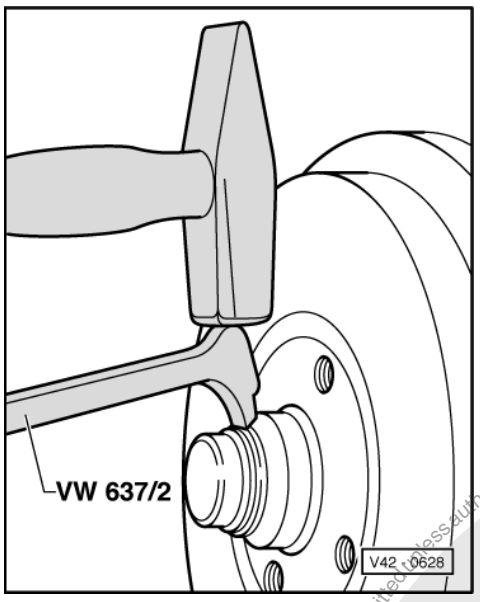

-> Fig.1 Pressing off grease cap

Loosen grease cap from seat by tapping lightly on the claw.

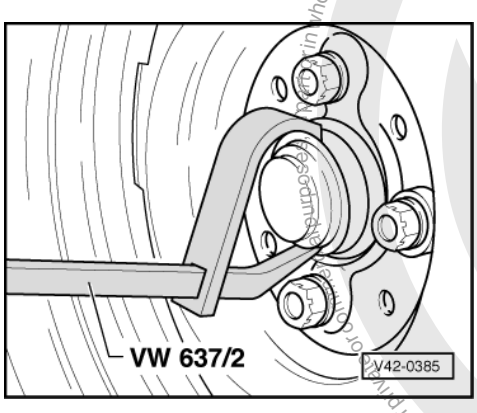

-> Fig.2 Pressing off grease cap

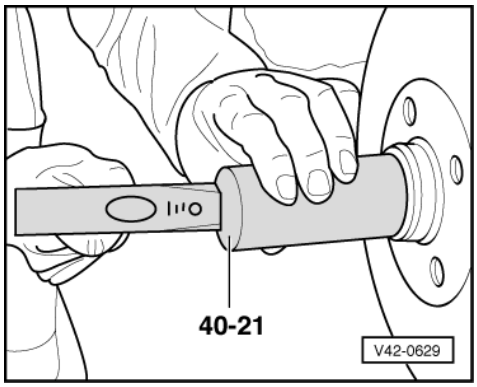

-> Fig.3 Driving in grease cap

Notes:

- Always renew damaged (dented) grease caps.

Protected by copyright. Copyright by Volkswagen AG.
Copyright by Volkswagen AG. Volkswagen AG does not guarantee or accept any liability with respect to the correctness of information in this document. Copying for private or commercial purposes, in whole or in part, is not permitted unless authorised by Volkswagen AG.
satelettronica

- Damaged (dented) grease caps allow ingress of moisture, therefore always use the illustrated tool.

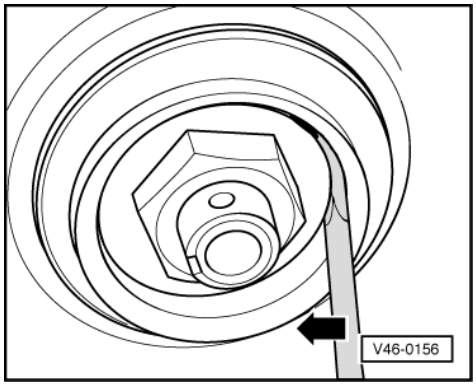

-> Fig.4 Adjusting wheel bearing play

Note:

Using a screwdriver it must be possible to move the thrust washer by finger pressure (without leverage).

- Secure with locking ring and new split pin.

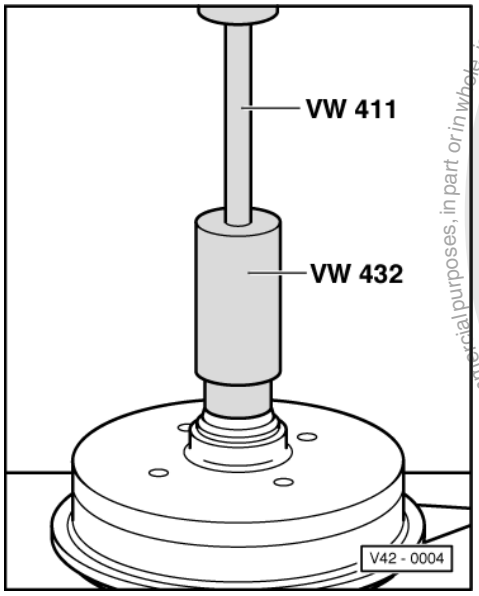

-> Fig.5 Pressing in outer wheel bearing outer race

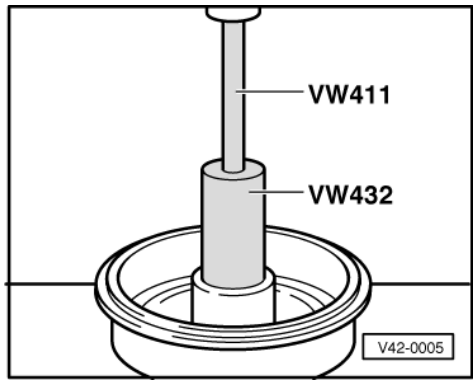

Protected by copyright. Copying for private or commercial purposes, in part or in whole, is not permitted unless authorised by Volkswagen AG. Volkswagen AG does not guarantee or accept any liability with respect to the correctness of information in this document. Copyright by Volkswagen AG.
satelettronica

-> Fig.6 Pressing in inner wheel bearing outer race

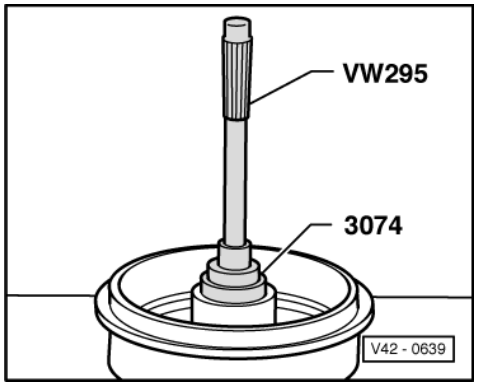

-> Fig.7 Driving in oil seal

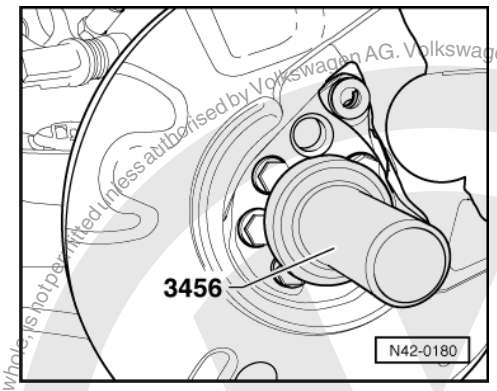

Protected by copyright. Copying for private or commercial purposes, in part or in whole, is not permitted unless authorised by Volkswagen AG. Volkswagen AG does not guarantee or accept any liability with respect to the correctness of information in this document. Copyright by Volkswagen AG.
satelettronica

-> Fig.8 Driving in cover ring

2.4 - Assembly overview wheel bearings 10.99>

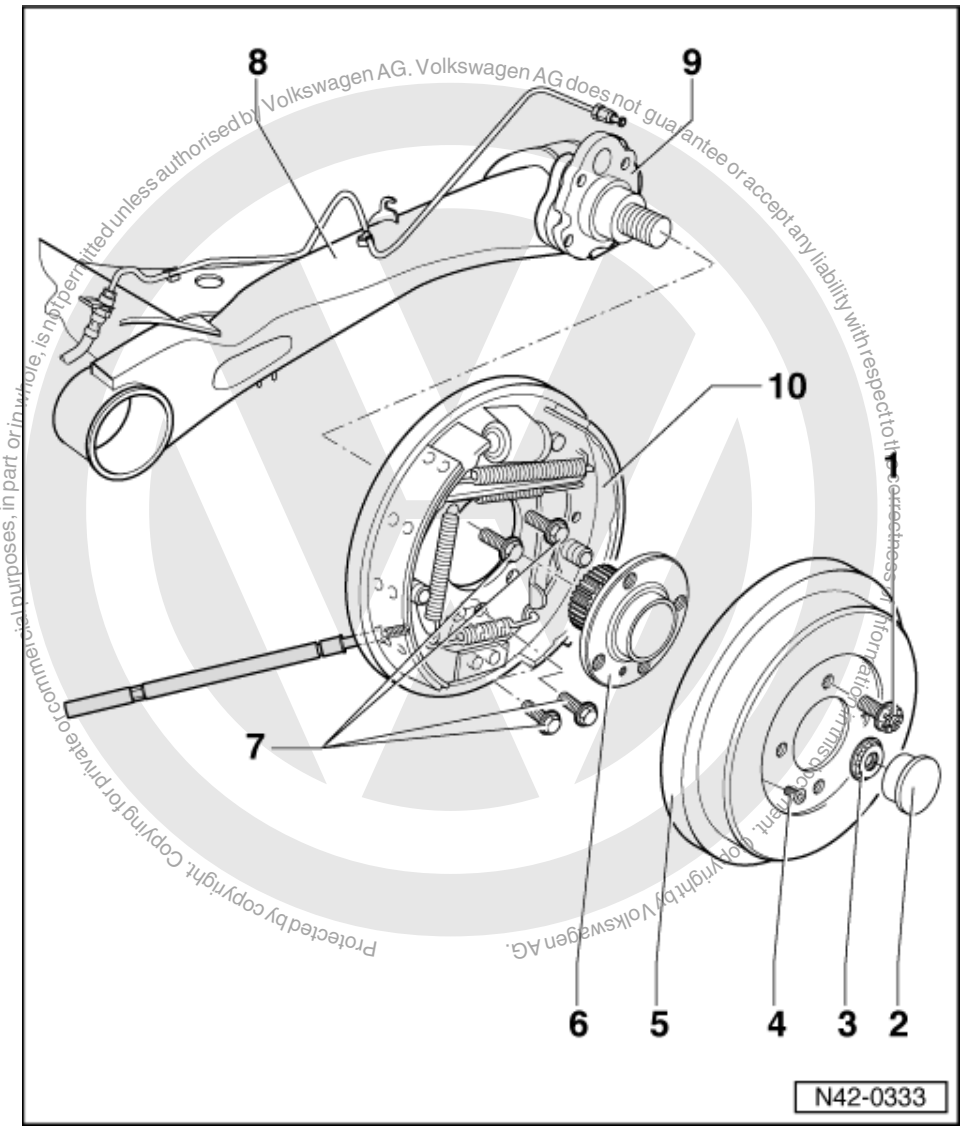

Protected by copyright. Copying for private or commercial purposes, in part or in whole, is not permitted unless authorised by Volkswagen AG. Volkswagen AG does not guarantee or accept any liability with respect to the correctness of information, messages, etc. Copyright by Volkswagen AG.

Illustrated here is the assembly overview of the wheel bearings for vehicles with drum brakes.

Wheel fitting for vehicles with disc brakes is the same.

All tightening torques and notes are therefore also valid for vehicles with disc brakes.

1 Wheel bolt, 110 Nm
2 Dust cap
- Renew each time after removing
  A perfect seal is only achieved using a new dust cap.
  Only then is an optimum function and long service life guaranteed.

satelettronica

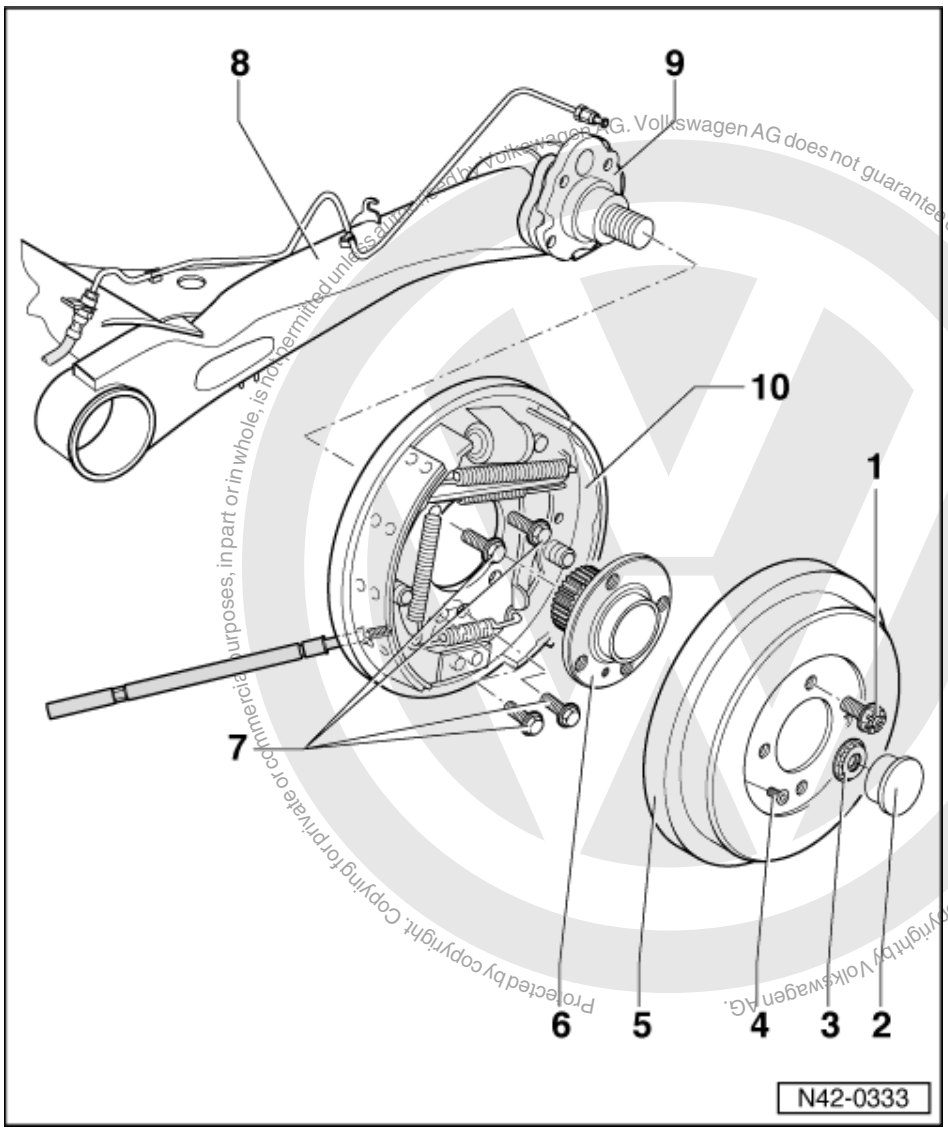

Protected by copyright. Copying for private or commercial purposes, in part or in whole, is not permitted unless authorised by Volkswagen AG. Volkswagen AG does not guarantee or accept any liability with respect to the correctness of information in this document. Copyright by Volkswagen AG.

satelettronica

3 Self-locking 12-point nut, 175 Nm
- Renew each time after removing

4 Cross-head screw

5 Brake drum

6 Wheel hub with wheel bearings

The wheel bearing and wheel hub are installed together in a housing.

This wheel bearing/hub unit is maintenance and adjustment free. Adjusting and servicing is not possible!

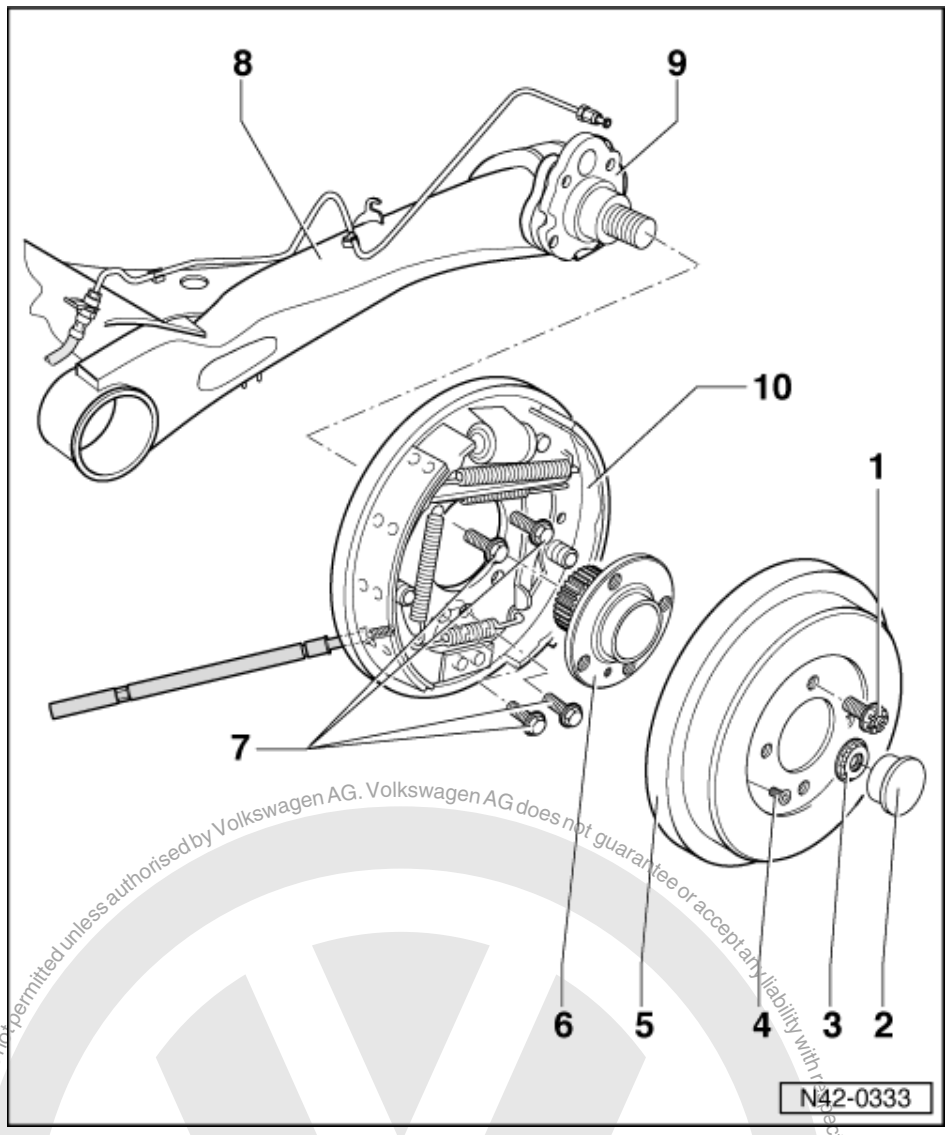

7 Bolt with washer, 60 Nm
8 Axle beam
9 Stub axle
- Straightening operations are not permitted
- Recutting the thread is not permitted!

10 Back plate with brake shoes
- Servicing

=> Brake system; Repair group 46

Protected by copyright. Copying for private or commercial purposes, in part or in whole, is not permitted unless authorised by Volkswagen AG. Volkswagen AG does not guarantee or accept any liability with respect to the correctness of information in this document. Copyright by Volkswagen AG.
satelettronica

2.5 - Removing and installing wheel bearing/wheel hub unit on vehicles with drum brakes

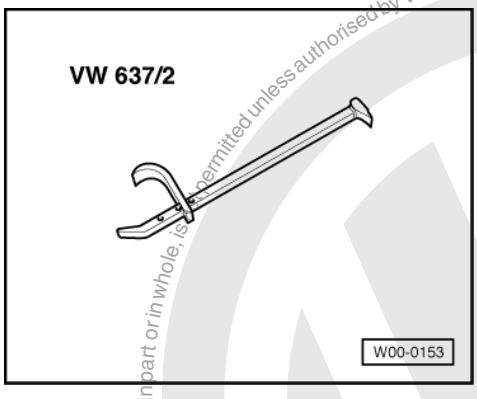

Special tools and workshop equipment required

- VW 637/2 Hub cap puller

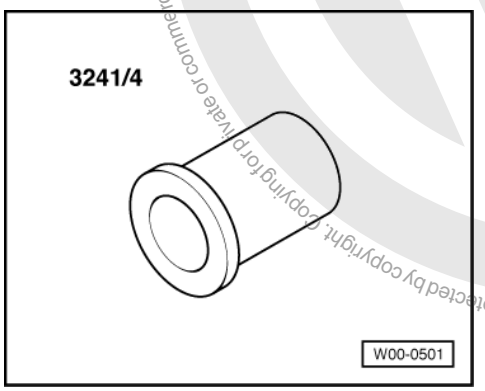

- 3241/4 Fitting sleeve

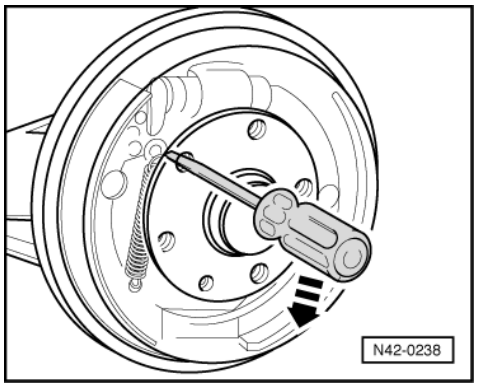

Removing

-> Fig.1 Releasing brake adjustment

- Insert a screwdriver through a hole in the brake drum and push the wedge upwards.
- Remove cross-head screw for brake drum and take off brake drum.

Protected by copyright. Copying for private or commercial purposes, in part or in whole, is not permitted unless authorised by Volkswagen AG. Copyright by Volkswagen AG. VW does not guarantee or accept any liability with respect to the correctness of information in this document.
satelettronica

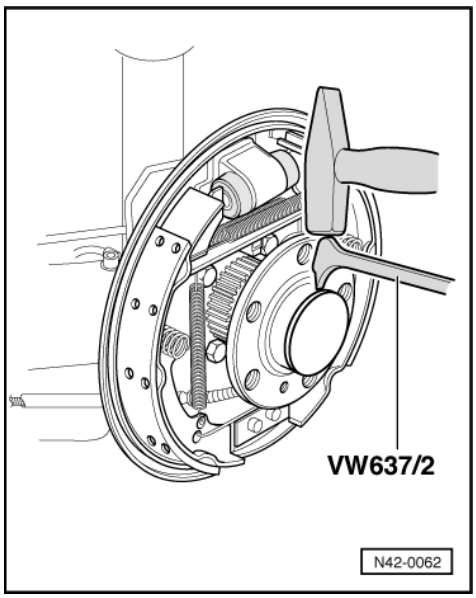

-> Fig.2 Pressing off dust cap

Loosen dust cap from seat by tapping lightly on the claw.

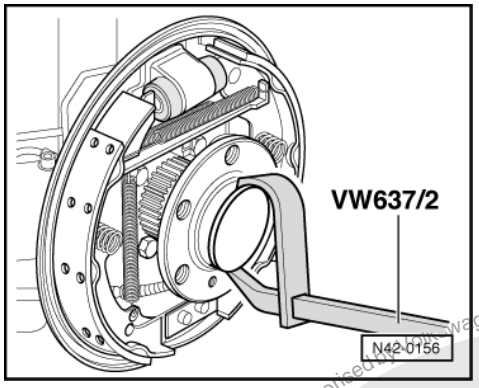

-> Fig.3 Pressing off dust cap

- Remove 12-point nut.
- Pull the hub/wheel bearing unit off the stub axle.

Installing

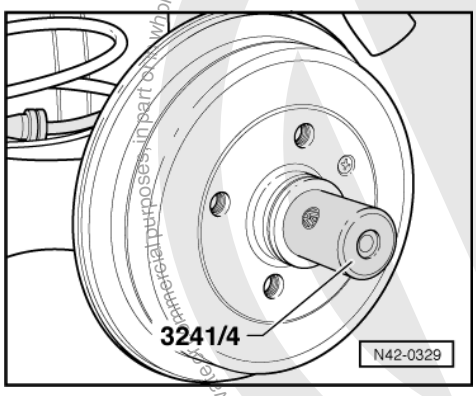

- Push the hub/wheel bearing unit carefully onto the stub axle.

Protected by copyright. Copyright by Volkswagen AG. Volkswagen AG does not guarantee or accept any liability with respect to the correctness of information in this document. Copyright by Volkswagen AG.
satelettronica

Ensure that the hub/wheel bearing unit is not canted!

- Use a new 12-point nut and tighten to 175 Nm.

-> Fig.4 Driving in dust cap
- Always renew damaged (dented) dust caps.
- Damaged (dented) dust caps allow ingress of moisture, therefore always use the tool illustrated.

2.6 - Removing and installing wheel bearing/wheel hub on vehicles with disc brakes

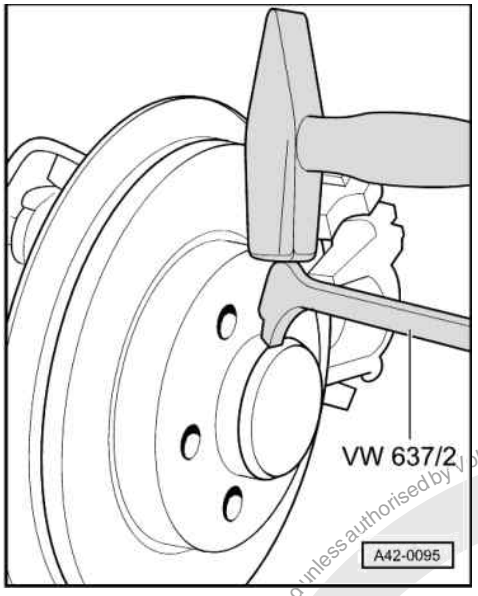

-> Fig.1 Pressing off dust cap
Loosen dust cap from seat by tapping lightly on the claw.

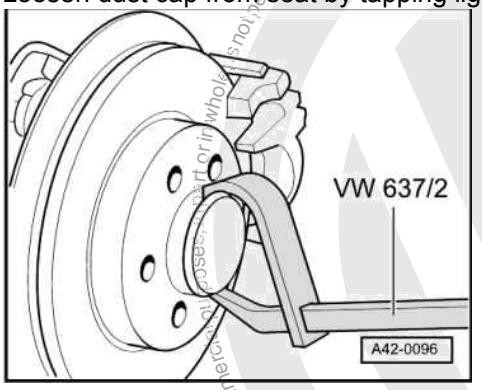

-> Fig.2 Pressing off dust cap

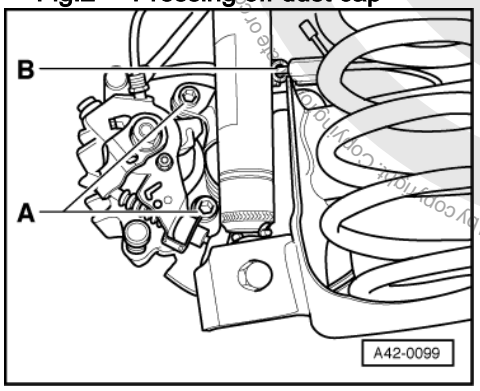

Protected by copyright. Copy, distribute or transmit only with permission of Volkswagen AG. Volkswagen AG does not guarantee or accept any liability with respect to the correctness of information in this document. Copyright by Volkswagen AG.
satelettronica

-> Fig.3 Removing brake caliper

- Remove securing bolts -A- from brake caliper.
- Remove brake caliper and hang up on body.
- Remove cross-head screw for brake disc and take off brake disc.
- Remove 12-point nut.
- Pull the hub/wheel bearing unit off the stub axle.

Installing

- Push the hub/wheel bearing unit carefully onto the stub axle.

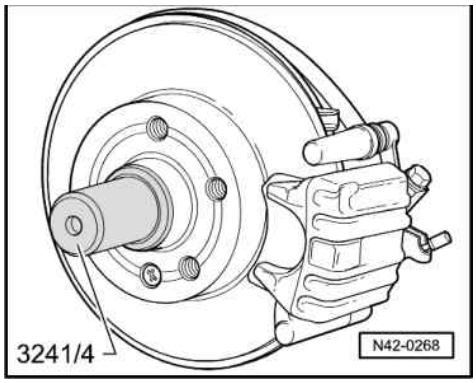

Ensure that the hub/wheel bearing unit is not canted!

- Use a new 12-point nut and tighten to 175 Nm.

-> Fig.4 Driving in dust cap

- Always renew damaged (dented) dust caps.
- Damaged (dented) dust caps allow ingress of moisture, therefore always use the tool illustrated.

Protected by copyright. Copying for private or commercial purposes, in part or in whole, is not permitted unless authorised by Volkswagen AG. Volkswagen AG does not guarantee or accept any liability with respect to the correctness of information in this document. Copyright by Volkswagen AG.
satelettronica

44 - Wheels, Tyres, Wheel alignment

1 - Vehicle alignment

1.1 - Vehicle alignment

1.2 - Test prerequisites:

- Measuring equipment correctly adjusted
- Vehicle unladen 1)

1) Unladened means: the weight of the vehicle ready for the road (fuel tank completely filled, spare wheel, vehicle tools and vehicle jack).

The fluid reservoir for the windscreen/headlight washer system must be full.

- Tyres inflated to correct pressure
- Vehicle accurately aligned, suspension bounced and rocked several times
- Suspension, steering and steering linkage check for excessive play and damage.

◆ Vehicle alignment should not be checked before the vehicle has completed a settling period (1000 to 2000 km (600 to 1200 miles)).

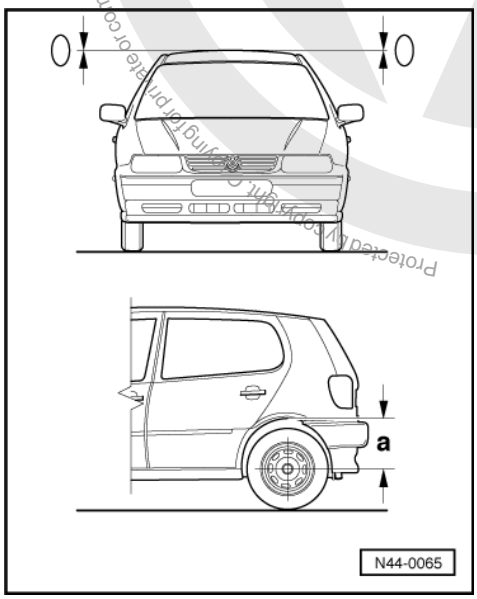

-> Vehicle transverse inclination "Zero position"

Right-hand drive vehicles or for example vehicles with an automatic gearbox can lean to one side slightly.

This is due to the installation position of the assemblies and their associated weight transfer and is normal.

If the measured values are outside the permitted tolerances, the cause may be an incorrect vehicle attitude.

- -> Then it is absolutely necessary to measure dimension "a" on left and right-hand sides.

Protected by copyright. Copying for private or commercial purposes, in part or in whole, is not permitted unless authorised by Volkswagen AG. Volkswagen AG does not guarantee or accept any liability with respect to the correctness of information in this document. Copyright by Volkswagen AG.
satelettronica

- Correct differences if necessary.

On front axle, compensate by adding weights to top of relevant suspension turret.
On rear axle, compensate by adding weights to relevant side of luggage compartment.
Sand filled sacks -weighting approx. 10 kg- are suitable for this.

1.3 - Vehicle alignment specifications

Front axle	Suspension strut axle			
Engine/equipment	37, 44 kW petrol and diesel, 47 kW diesel, 55 kW with/without ABS ▸09.99	74 kW 16 V Vehicles up to vehicle identity No. 6N XY 281178	55 kW Autom. (version for Japan), 55 kW with ABS 10.99 ▸	All 88 kW 16 V, 74 kW 16 V as of vehicle identity No. 6N XY 281179
Total track (not depressed)	0° ± 10'			
Camber1) (in straight-ahead position)	-25' ± 20'	-30' ± 20'	-25' ± 20'	-30' ± 20'
Max. permissible difference between sides	max. 20'			
Track difference angle at 20° left and right lock	-1°05' ± 30'	-1°05' ± 30'	-1°30' ± 30'	-1°30' ± 30'
Caster (not adjustable) Max. permissible difference between sides	+1° 20' ± 30' max. 30'	+1° 20' ± 30' max. 30'	+2° 20' ± 30' max. 30'	+2° 20' ± 30' max. 30'

1) Camber corrections can only be undertaken at the wheel bearing housing/suspension strut connection. Camber adjustment => Page 115 .

Rear axle	Torsion beam axle	Torsion beam axle
Model	All	These values only apply for "Zero position" for vehicle transverse inclination Explanation => Page 114
Camber Max. permissible difference between sides	-1° 40' ± 20' max. 20'	-1° 40' ± 10' max. 20'
Total track (for prescribed camber) Max. permissible difference in direction of travel	+20' ± 10' max. 20'	+20' ± 10' max. 20'

1.4 - Adjusting front wheel camber

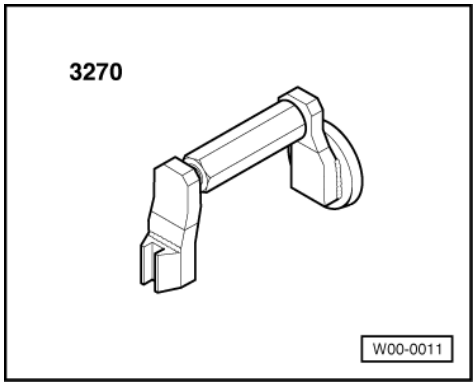

Volkswagen AG. Volkswagen AG does not guarantee or accept any liability with respect to the correctness of information in this document. Copyright by Volkswagen AG. Protected by copyright. Copying for private or commercial purposes, in part or in whole, is not permitted unless authorised by Volkswagen AG.
satelettronica

Special tools and workshop equipment required

- Tensioning device

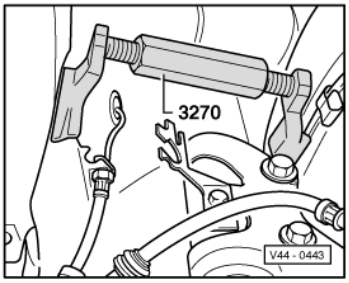

- -> Install special tool as shown in illustration and slightly pre-tension.
- Loosen suspension strut/wheel bearing housing connection.
- Adjust camber by turning the spindle to specified setting.
- Tighten suspension strut/wheel bearing housing connection (95 Nm).
- Check camber and if necessary, repeat adjustment.

Note:

- Slight cant of tool is permitted.

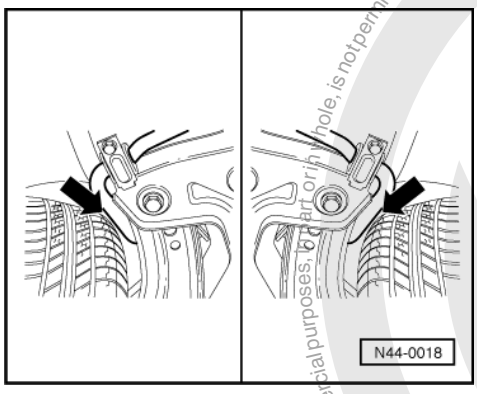

- Do not move steering with tool in place!

1.5 - Checking left and right-hand wheel lock

-> The distance between sub-frame and tyres (arrow) must be equal.

If the distances are unequal then this can be corrected by turning the left and right-hand track rods.

Example:

Left-hand wheel lock distance less than right-hand

- Loosen track rod lock nuts.
- Turn left-hand track rod anti-clockwise (out of track rod).
- To achieve equal dimensions turn right-hand track rod in opposite direction (screw into track rod).
- Check complete track, if necessary correct.
- Tighten lock nuts.

Protected by copyright. Copyright by Volkswagen AG. Volkswagen AG does not guarantee or accept any liability with respect to the correctness of information in this document. Copying for private or commercial purposes, in part or in whole, is not permitted unless authorised by Volkswagen AG.
satelettronica

After turning track rods, ensure that the bellows are not twisted.

1.6 - Calculating the direction of travel:

- If both track figures have the same proceeding sign (+/+ or -/-), subtract the smaller figure from the larger figure and divide by 2.

Left rear wheel track	Right rear wheel track
+ 15'	+ 5'
15'- 5'= 10' 10' /2 = 5'	

Deviation from direction of travel = 5'

- Add figures with different prefix (+/-) and divide by 2.

Left rear wheel track	Right rear wheel track
+ 15'	- 5'
15' + 5'= 20' 20' / 2 = 10'	

Deviation from direction of travel = 10'

The individual result is the actual alignment deviation from the vehicle longitudinal axis.

Protected by copyright. Copying for private or commercial purposes, in part or in whole, is not permitted unless authorised by Volkswagen AG. Volkswagen AG does not guarantee or accept any liability with respect to the correctness of information in this document. Copyright by Volkswagen AG.

satelettronica

48 - Steering

1 - Airbag, steering wheel, steering column

1.1 - Airbag, steering wheel, steering column

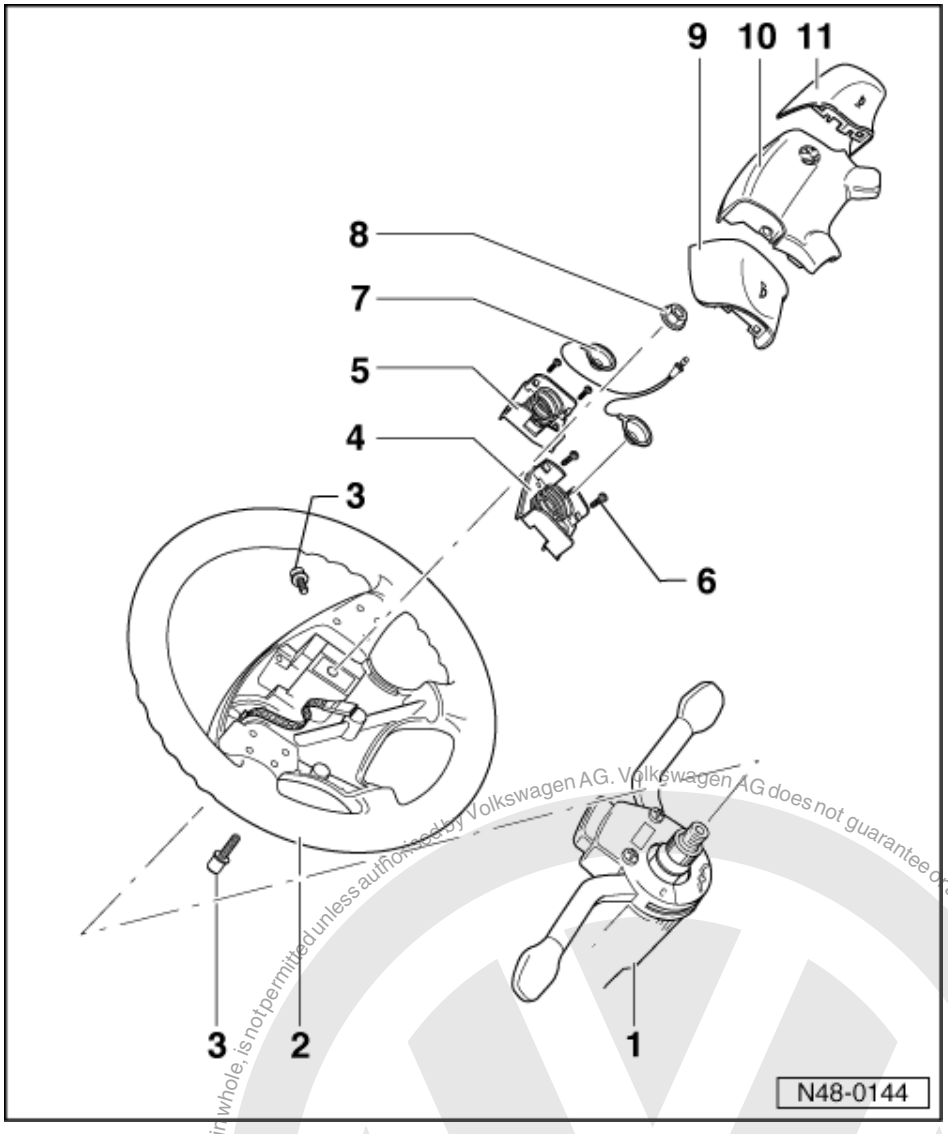

1.2 - Assembly overview driver's airbag, steering wheel>09.99

1 Steering column
2 Steering wheel
- Removing and installing =>Page 120
- Removing and installing coil connector =>Page 121

3 Hexagon socket head bolt, 7 Nm
- Renew

4 Left-hand lower horn button
5 Right-hand lower horn button

satelettronica
Protected by copyright. Copying for private or commercial purposes, in part or in whole, is not permitted unless authorised by Volkswagen AG. Volkswagen AG does not guarantee or accept any liability with respect to the correctness of information in this document. Copyright by Volkswagen AG.

6 Bolt (Torx 10)

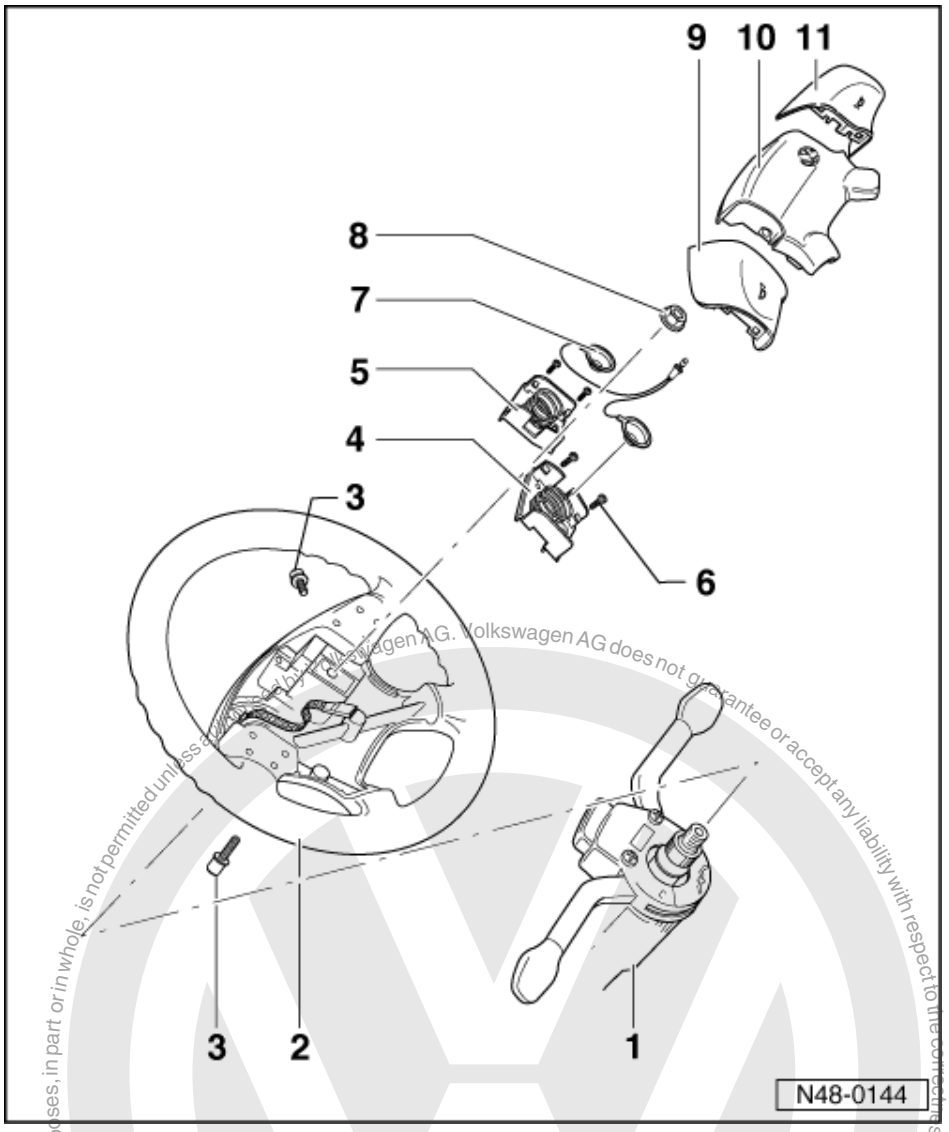

7 Contact with wiring
8 Hexagon nut, 50 Nm
9 Left-hand upper horn button
- Always replace both upper buttons

10 Airbag unit
- Removing and installing =>Page 120

11 Right-hand upper horn button
- Always replace both upper buttons

Protected by copyright. Copyright by Volkswagen AG.
Volkswagen AG. Volkswagen AG does not guarantee or accept any liability with respect to the correctness of information in this document. Copyright by Volkswagen AG.
satelettronica

1.3 - Removing and installing airbag unit>09.99

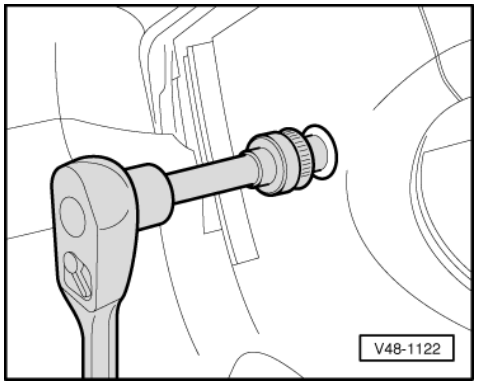

Removing

- Disconnect battery earth strap.
- Centralize steering wheel.
- -> Remove both socket head bolts from airbag unit.
- Remove airbag unit from steering wheel and pull connector off airbag unit.

Installing

Install in reverse order

Note:

Only use new hexagon socket head bolts for airbag unit. Tightening torque: 7 Nm.

- After installing the airbag unit first switch on ignition, then connect battery earth strap.

Warning!
Ensure that no one is in the vehicle when connecting the battery earth strap.

Airbag system functional check and interrogating fault memory

=> General body repairs; Repair group 01; self-diagnosis of airbag system self-diagnosis of airbag system

Safety precautions when working on airbag

=> General body repairs; Repair group 69; Removing and installing airbag Removing and installing airbag

1.4 - Removing and installing steering wheel>09.99

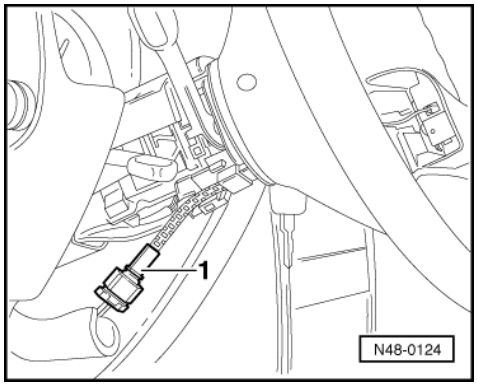

Protected by copyright. Copyright by Volkswagen AG.
Copyright by Volkswagen AG. Volkswagen AG does not guarantee or accept any liability with respect to the correctness of information in this document.
Copyright by Volkswagen AG. Volkswagen AG does not guarantee or accept any liability with respect to the correctness of information in this document. Copyright by Volkswagen AG. Volkswagen AG does not guarantee or accept any liability with respect to the correctness of information in this document. Copyright by Volkswagen AG. Volkswagen AG does not guarantee or accept any liability with respect to the correctness of information in this document. Copyright by Volkswagen AG. Volkswagen AG does not guarantee or accept any liability with respect to the correctness of information in this document. Copyright by Volkswagen AG. Volkswagen AG does not guarantee or accept any liability with respect to the correctness of information in this document. Copyright by Volkswagen AG. Volkswagen AG does not guarantee or accept any liability with respect to the correctness of information in this document. Copyright by Volkswagen AG. Volkswagen AG does not guarantee or accept any liability with respect to the correctness of information in this document. Copyright by Volkswagen AG. Volkswagen AG does not guarantee or accept any liability with respect to the correctness of information in this document. Copyright by Volkswagen AG. Volkswagen AG does not guarantee or accept any liability with respect to the correctness of information in this document. Copyright by Volkswagen AG.
Protected by copyright. Copyright by Volkswagen AG. Volkswagen AG does not guarantee or accept any liability with respect to the correctness of information in this document. Copyright by Volkswagen AG. Volkswagen AG does not guarantee or accept any liability with respect to the correctness of information in this document. Copyright by Volkswagen AG. Volkswagen AG does not guarantee or accept any liability with respect to the correctness of information in this document. Copyright by Volkswagen AG. Volkswagen AG does not guarantee or accept any liability with respect to the correctness of information in this document. Copyright by Volkswagen AG. Volkswagen AG does not guarantee or accept any liability with respect to the correctness of information in this document. Copyright by Volkswagen AG. Volkswagen AG does not guarantee or accept any liability with respect to the correctness of information in this document. Copyright by Volkswagen AG. Volkswagen AG does not guarantee or accept any liability with respect to the correctness of information in this document. Copyright by Volkswagen AG.
satelettronica

Removing

- Remove airbag unit. =>Page 120
- Remove trim below steering column switch.
- -> Separate connector (arrow). (Pull foam rubber sleeve off connector, if fitted).
- Remove hexagon nut and pull steering wheel off steering column.

Notes:

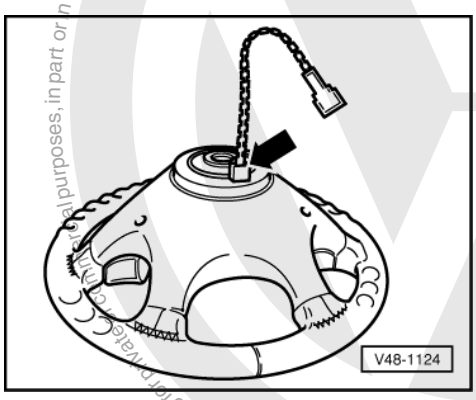

-> After pulling steering wheel off, turn centring ring slightly so that the wire (arrow) faces downwards. (Hold steering wheel in installation position). The centring ring then locates and is prevented from turning.

If this step is not performed or if the centring ring is turned in an uncontrolled manner, it can lead to the coil connector in the centring ring being over-stressed at full lock, causing irreparable damage.

Installing

- Fit steering wheel, screw on nut and tighten. Tightening torque: 50 Nm.
- Connect airbag unit connector below steering wheel.
- Install trim panel below steering column. Ensure that the centring ring cable connection is located in the recess in the trim panel.
- Connect connector in steering wheel to airbag unit connector.
- Install airbag unit =>Page 120

Note:

Use new hexagon socket head bolts for airbag unit.

- After installing the airbag steering wheel first switch on ignition, then connect battery earth strap.

Warning! Ensure that no one is in the vehicle when connecting the battery earth strap.

1.5 - Removing and installing coil connector with slip ring>09.99

Notes:

- When removing and installing the coil connector with slip ring, ensure that the coil connector is in the centre position.
- As a new part the coil connector with slip ring is secured in the centre position by a cable tie.

Removing

- Remove airbag unit=>Page 120 .

Volkswagen AG. Volkswagen AG does not guarantee or accept any liability with respect to the correctness of information in this document. Copyright by Volkswagen AG. Not to be reproduced unless authorised by Volkswagen AG. Reproducing for private or commercial purposes, in part or in whole, is prohibited unless authorised by Volkswagen AG.
satelettronica

- Remove steering wheel=>Page 120 .

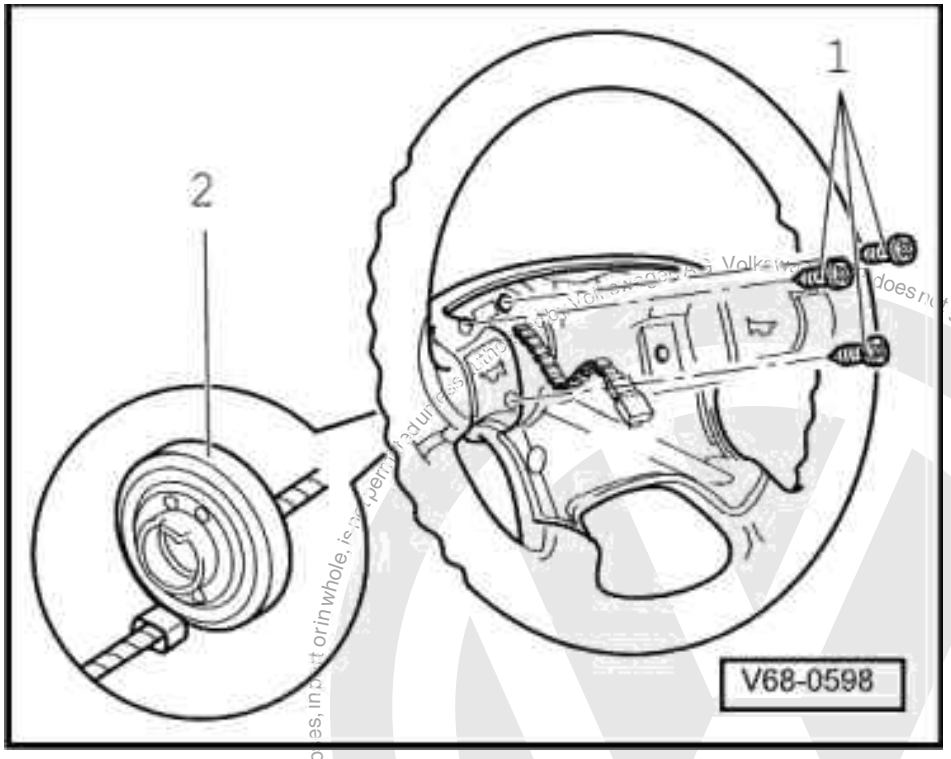

- Separate single connector for horn.
- -> Remove screws -1- and pull coil connector with slip ring -2- off steering wheel.

Installing

- Install steering wheel=>Page 121 .
- Install airbag unit=>Page 120 .

Protected by copyright. Copying for private or commercial purposes, in part or in whole, is not permitted unless authorised by Volkswagen AG. Volkswagen AG does not guarantee or accept any liability with respect to the correctness of information in this document. Copyright by Volkswagen AG.
satelettronica

1.6 - Assembly overview driver's airbag, steering wheel 10.99>

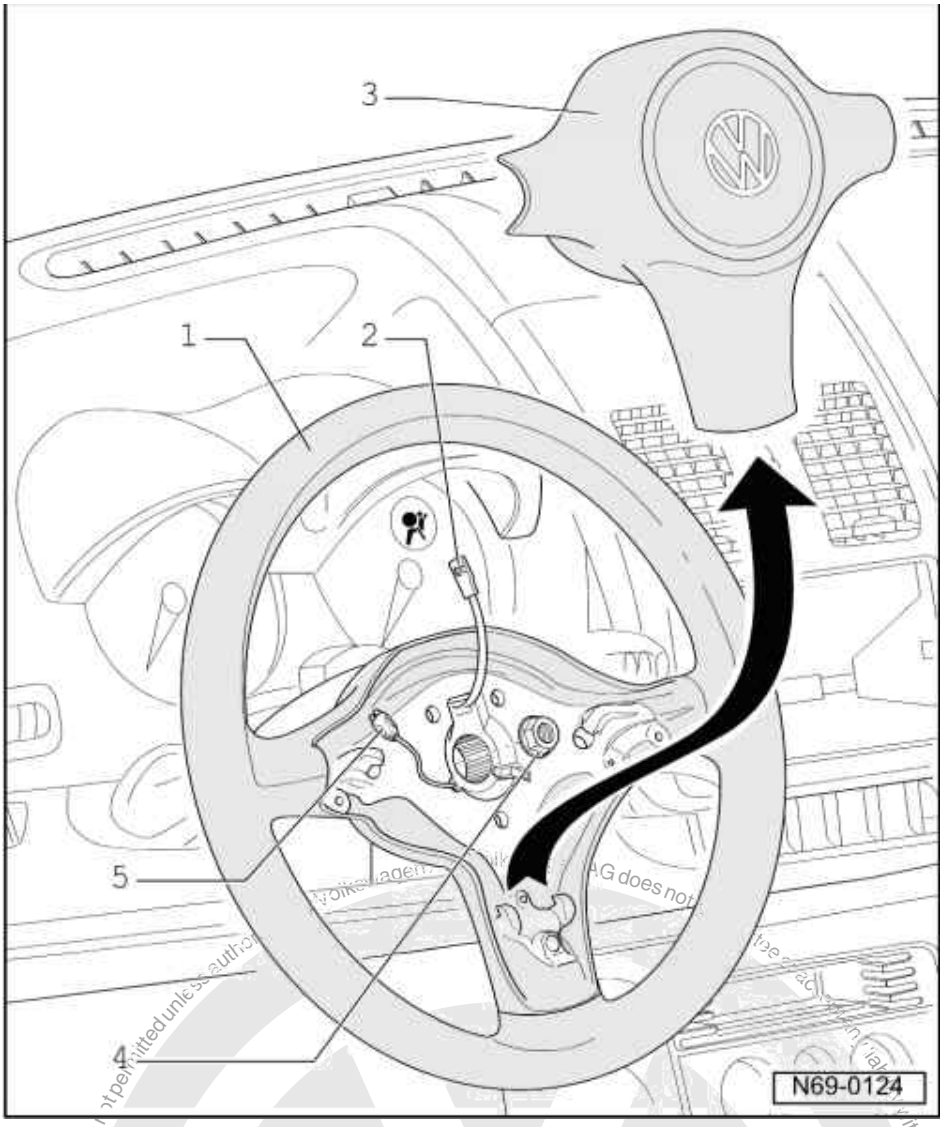

1 Steering wheel
- Removing => Page 127

2 Connector
- For airbag unit

3 Airbag unit
- Removing => Page 124

4 Hexagon combi-nut
- 50 Nm

5 Connector
- For horn

Protected by copyright. Copying for private or commercial purposes, in part or whole, is not permitted unless authorised by Volkswagen AG. Volkswagen AG does not guarantee or take any responsibility with respect to the correctness of information in this document. Copyright by Volkswagen AG.
satelettronica

1.7 - Removing and installing driver's airbag unit 10.99 >

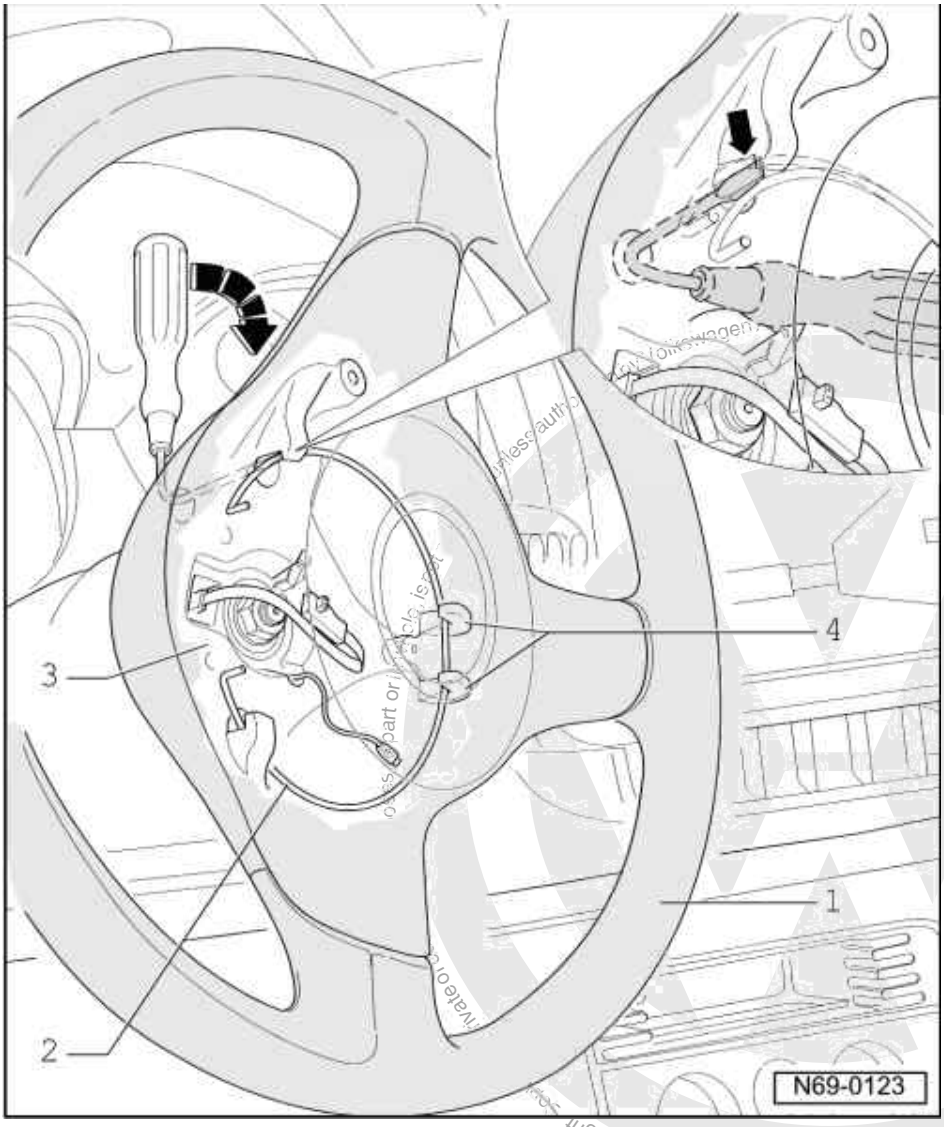

Protected by copyright. Copyright by Volkswagen AG. does not guarantee or accept any liability with respect to the correctness of information in this document.
satelettronica

Removing

- Disconnect battery earth strap.
- Release steering column adjustment.
- Turn steering wheel - 1 - until horizontal steering wheel spokes are vertical. Pull out steering column completely and press down to lowest position.
- Insert a screwdriver with approx. 5 mm wide blade and angled to give a length of 55 mm, from the back side into hole in steering wheel hub.
- Turn screwdriver through 90°, thereby pushing securing ring -2- off locking lugs in steering wheel hub and thereby releasing airbag unit on this side.
- Turn steering wheel back 180° and release second locking lug on opposite side.

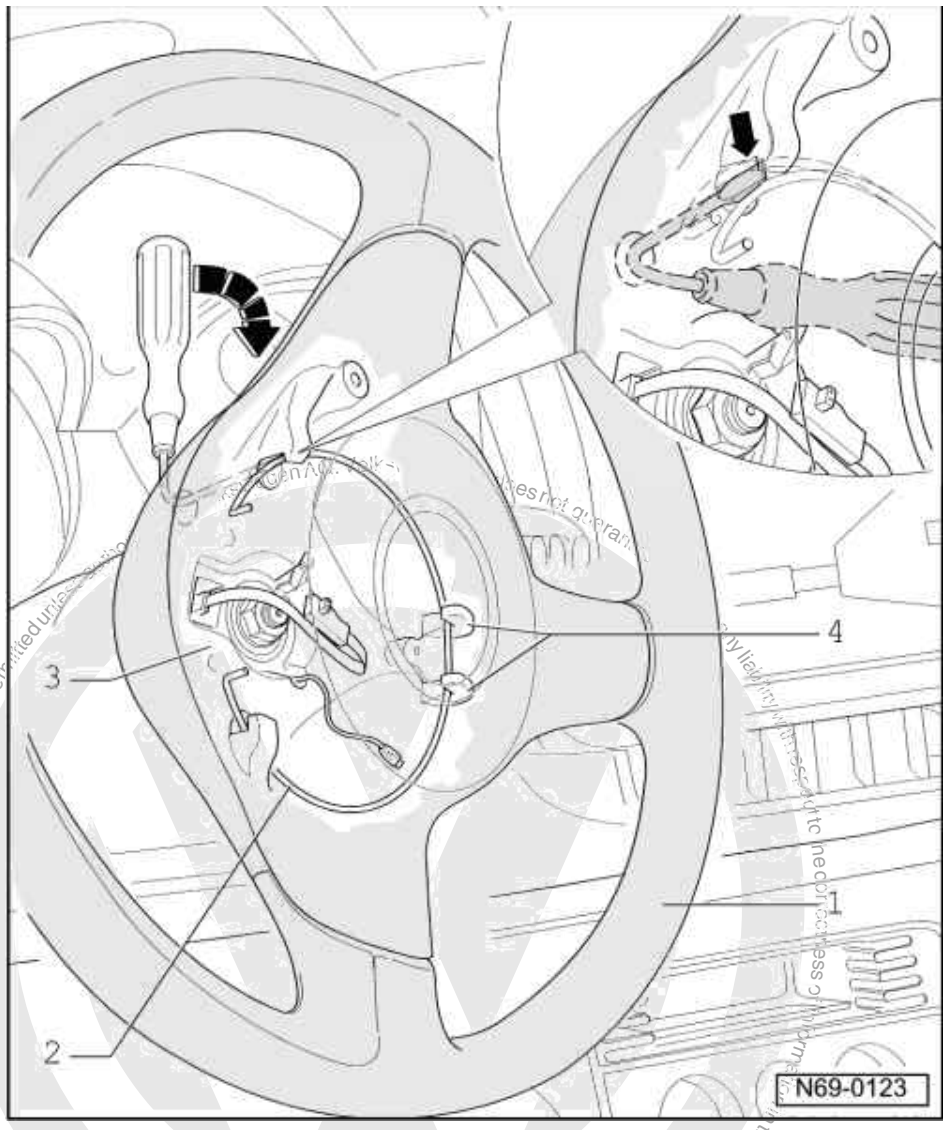

- Grasp airbag unit on horizontal spokes and push out of vertical anchorage.
- Pull connector off airbag unit.

Installing

- Fit connector onto airbag unit.
- Position airbag in installation position. Lock airbag unit by pressing on horizontal spoke section first and then on vertical section.
- Secure steering column adjustment.
- Switch on ignition.

Warning!
When connecting the battery earth strap ensure no person is in the vehicle.

- Connect battery earth strap.

satelettronica

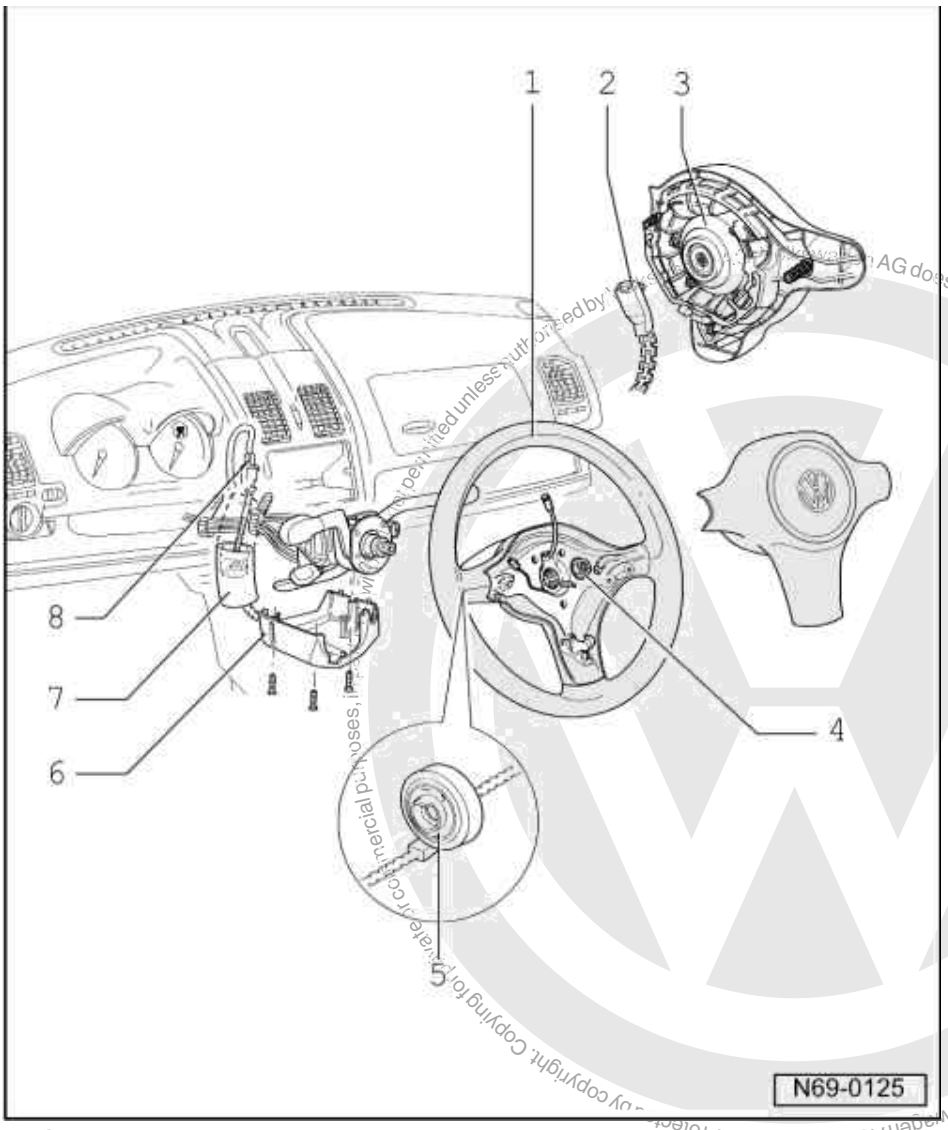

1 Steering wheel
- Removing => Page 127
- Installing => Page 128

2 Connector

3 Airbag unit

4 Hexagon combi-nut
- 50 Nm

5 Coil connector with slip ring
- Removing=>Page 128

6 Trim lower section

7 Foam tube

8 Connector

satelettronica

1.8 - Removing and installing steering wheel 10.99>

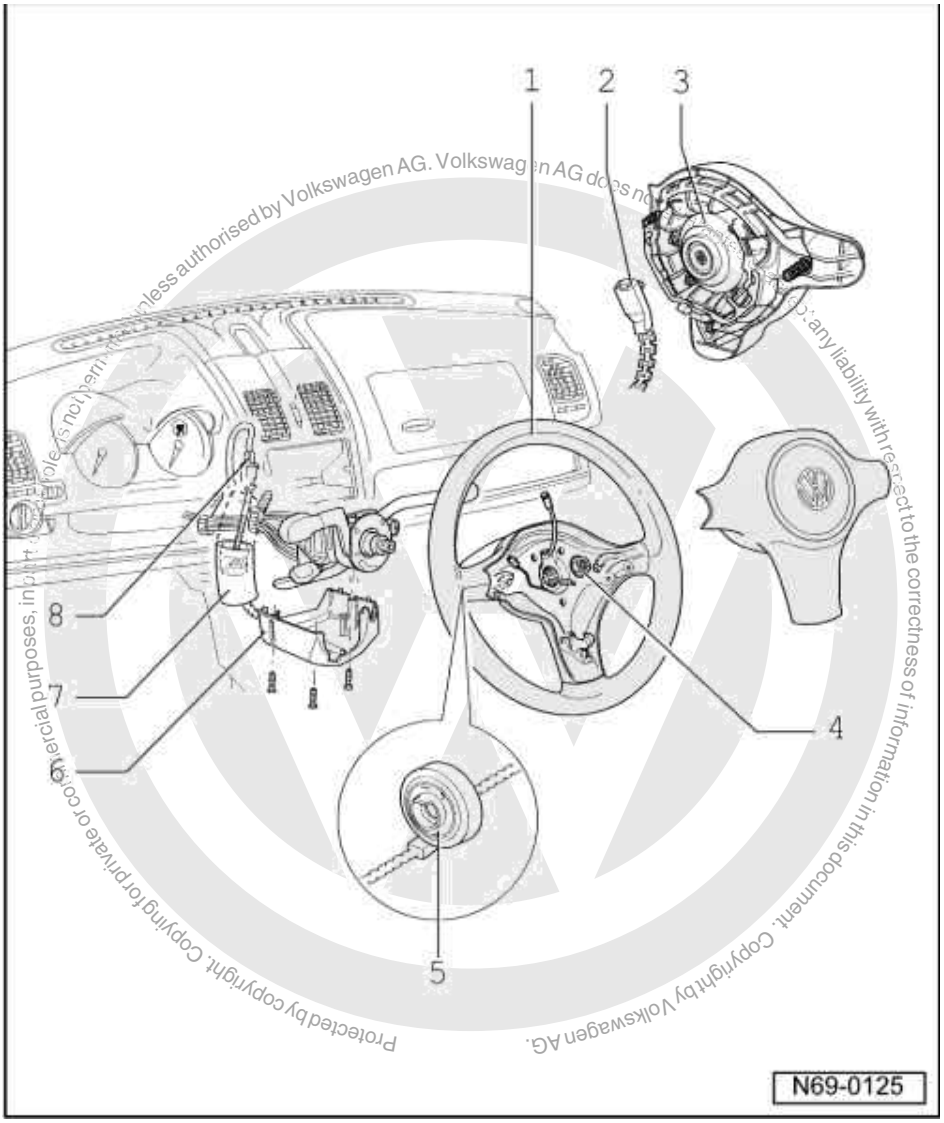

Protected by copyright. Copying for private or commercial purposes, in whole or in part, is not permitted unless authorised by Volkswagen AG. Volkswagen AG does not guarantee or accept any liability with respect to the correctness of information in this document. Copyright by Volkswagen AG.

Removing

- Removing driver's airbag unit => Page 124 .
- Remove steering column switch lower trim section - 6 -.
- Pull foam tube - 7 - off the connector - 8 - and separate connector.
- Turn wheels to straight-ahead position.
- Remove hexagon nut - 4 - and pull steering wheel off steering column (hexagon nut 50 Nm).

Coil connector with slip ring - 5 - remains on the steering wheel.

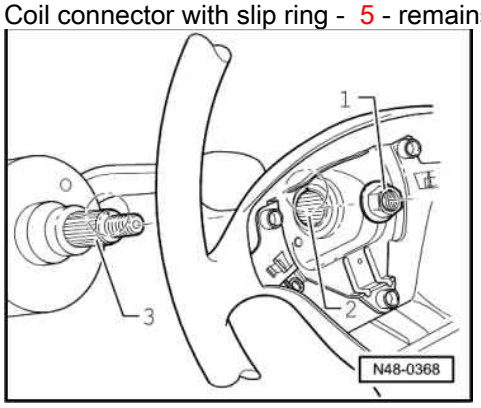

satelettronica

Installing steering wheel

- -> Fit steering wheel so that the line marked on the steering wheel hub -2- and the centre punch mark on the steering column -3- -arrow B- align.

Steering columns supplied as a spare part do not have a centre punch mark.

They must be marked after performing alignment tests or a test drive.

1.9 - Removing and installing coil connector with slip ring 10.99>

Removing

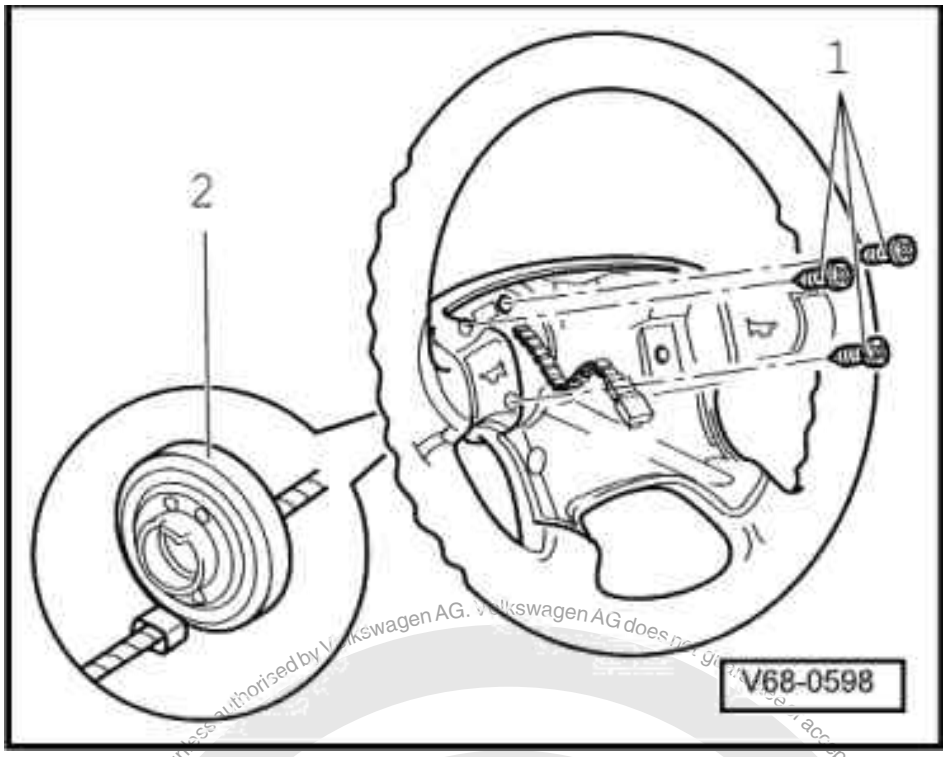

- Driver's airbag, steering wheel and lower steering column switch trim removed.

- Separate single connector for horn and connector from coil connector with slip ring.
- -> Unscrew Phillips screws -1- and pull coil connector with slip ring -2- off the steering wheel.

Note:

- When removing and installing the coil connector with slip ring, ensure that the coil connector is in the centre position.
- As a new part the coil connector with slip ring is secured in the centre position by a cable tie.

Installing:

Installation is carried out in the reverse sequence, when doing this note the following:

- After installing the airbag steering wheel first switch on ignition, then connect battery earth strap.

Warning! Ensure that no one is in the vehicle when connecting the battery earth strap.

Protected by copyright. Copying for private or commercial purposes, in any form or in whole, is not permitted without the authorised by Volkswagen AG. Volkswagen AG does not guarantee or accept any liability with respect to the correctness of information in this document. Copyright by Volkswagen AG.

satelettronica

1.10 - Removing and installing coil connector with slip ring; vehicles with ESP 10.99>

Vehicles with ESP are additionally equipped with a steering angle sensor -G85. It is installed together with coil connector and slip ring in a housing.

Removing

- Driver's airbag, steering wheel and lower steering column switch trim removed.

  Check that the front wheels are in the straight-ahead position.

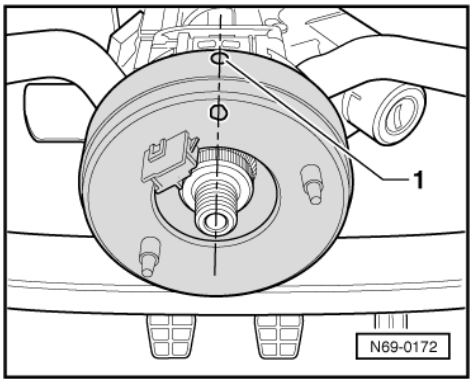

- If necessary position front wheels in straight-ahead position and remove steering wheel.
- -> Position steering angle sender in central position;
  A yellow spot must be visible in hole -1-.
  The markings must align.

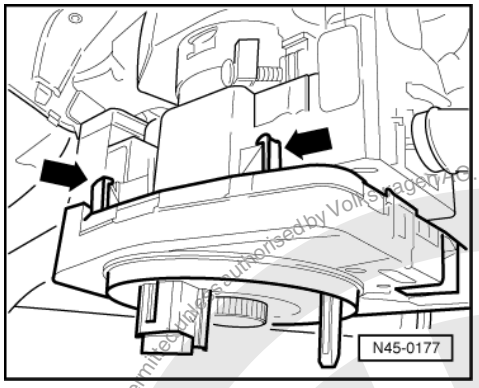

- -> Carefully raise retaining lugs -arrows- and pull off steering angle sender.
- Cut cable tie for connector (Qty. 2) and separate connector.

Installing:

Installation is carried out in the reverse sequence, when doing this note the following:

- Push on steering angle sensor until lugs engage.

  Remove transportation protection when a new steering angle sensor is installed.

- After installing, perform basic setting.

=> Running gear self-diagnosis for ABS; Repair group 01; Performing self-diagnosis. Performing self-diagnosis.

The basic setting for steering angle sender must be checked after the following assembly work:

- When the steering angle sender -G85 has been removed or replaced,
- When the steering column has been removed or replaced,

Protected by copyright. Copyright by Volkswagen AG.
Volkswagen AG does not guarantee or accept any liability with respect to the correctness of information in this document. Copyright by Volkswagen AG.
For commercial purposes, in part or in whole, is prohibited unless authorised by Volkswagen AG.
satelettronica

- When the steering wheel is repositioned.

Check basic setting for steering angle sender -G85

=> Running gear self-diagnosis for ABS; Repair group 01; Performing self-diagnosis. Performing self-diagnosis.

- After installing the airbag steering wheel first switch on ignition, then connect battery earth strap.

Warning! Ensure that no one is in the vehicle when connecting the battery earth strap.

Protected by copyright. Copy for private or commercial purposes, in part or in whole, is not permitted unless authorised by Volkswagen AG. Volkswagen AG does not guarantee or accept any liability with respect to the correctness of information in this document. Copyright by Volkswagen AG.

1.11 - Removing and installing column tube with steering column

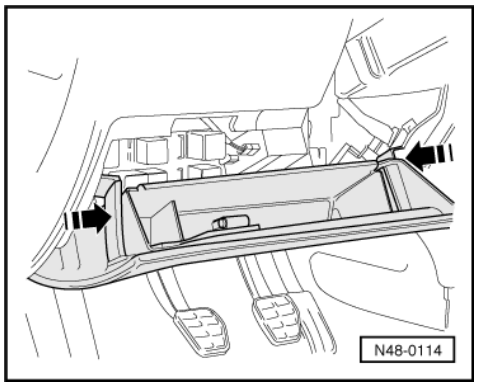

Removing

Assembly sequence for vehicles ▸09.99

- Remove airbag unit=>Page 120 .
- Remove steering wheel=>Page 120 .
- -> Press stowage compartment clips together in direction of arrows.
- Fold stowage compartment down and pull out towards rear.

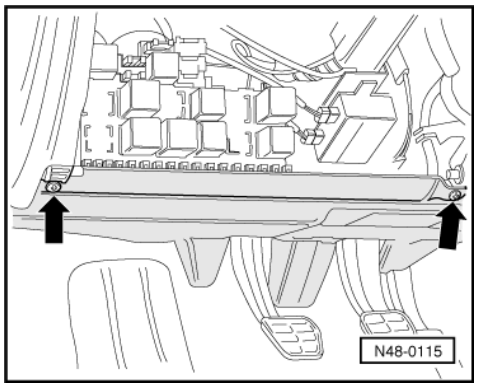

- -> Removing footwell cover.

satelettronica

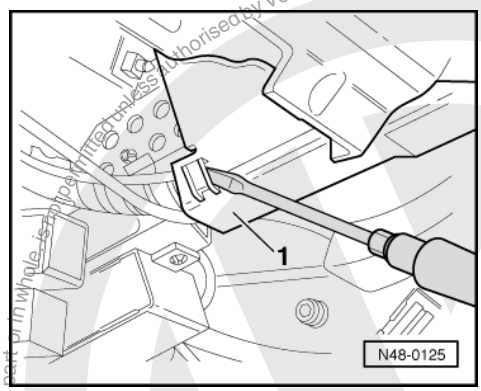

- -> Unclip cable channel -1- from column tube.

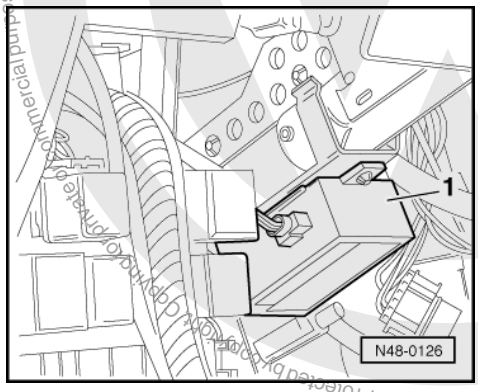

- -> Unclip immobilizer control unit -1-.
- Separate cable connector on steering column switch.

Assembly sequence for vehicles 10.99 ▸

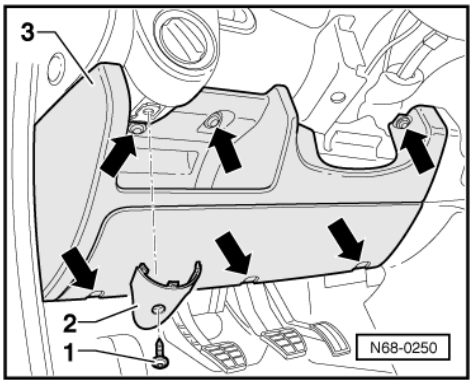

- Remove airbag unit=>Page 124 .
- Remove steering wheel=>Page 127 .

Vehicles with electronic stability programme -ESP-

- Remove coil connector with slip ring and steering angle sender=> 129 .
- -> Remove cover -2- and -3-.

satelettronica

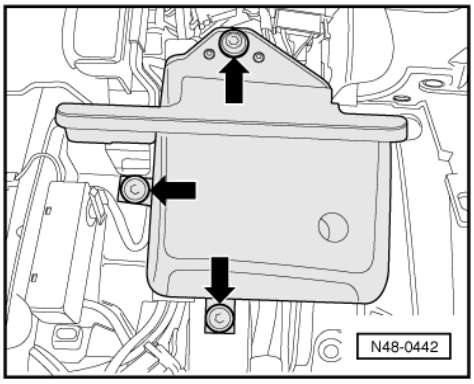

- -> Remove knee padding -arrows-.

The continuation of the work sequence is now valid for all vehicles

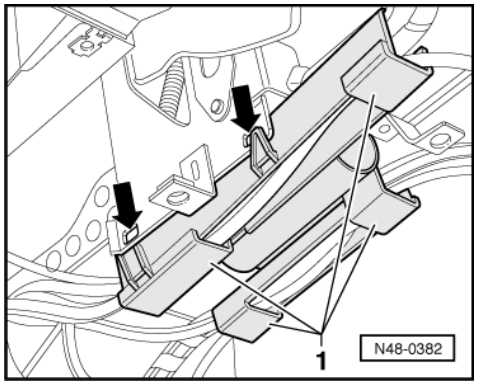

- -> Unclip cable channel -1- from column tube.

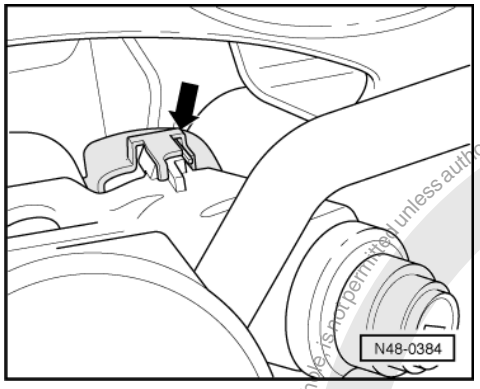

- -> Remove plastic cover -arrow- over the ignition/starter switch connector.
- Pull connector off ignition/starter switch.

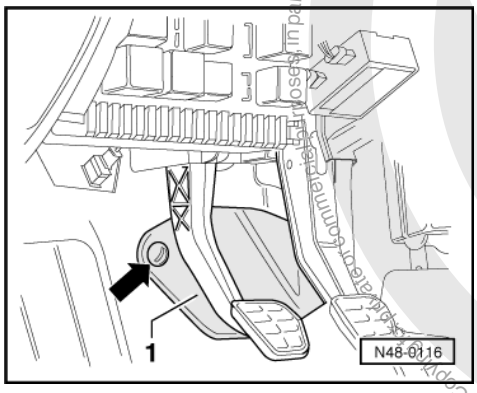

satelettronica
Protected by copyright. Copyright by Volkswagen AG.
Copyright by Volkswagen AG. Volkswagen AG does not guarantee or accept any liability with respect to the correctness of information in this document.
Duplicate or commercial use is not permitted unless authorised by Volkswagen AG.

- -> Removing cover -1-.

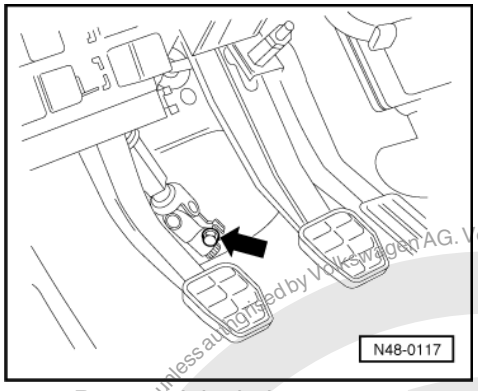

- -> Remove joint bolt.

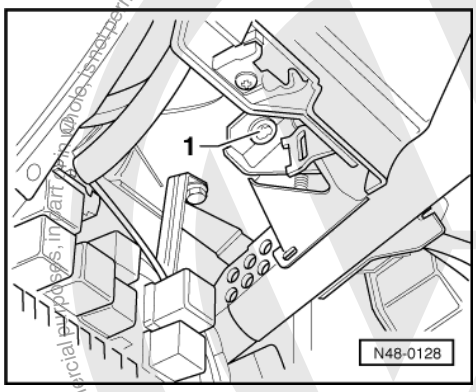

Warning!
Wear protective goggles.

- -> Drill out shear bolts -1- or chisel off with a suitable chisel.
- Pull joint off steering pinion and at the same time pull column tube out rearwards.
- Remove drilled out bolts from support if necessary (for ease of illustration 2nd bolt is not shown).

Installing

Installation is carried out in the reverse sequence, when doing this note the following:

- Replace captive nut on joint with a self-locking nut.

Vehicles with electronic stability programme -ESP-

- Install coil connector with slip ring and steering angle sender=> 129 .
- Then a zero comparison must be performed.

=> Running gear self-diagnosis for ABS; Repair group 01; Performing self-diagnosis. Performing self-diagnosis.

Protected by copyright. Copying for private or commercial purposes, in part or in whole, is not permitted unless authorised by Volkswagen AG. Volkswagen AG does not guarantee or accept any liability with respect to the correctness of information in this document.
satelettronica

1.12 - Assembly overview steering column, column tube; >Vehicle identification No. 6N V 300 000

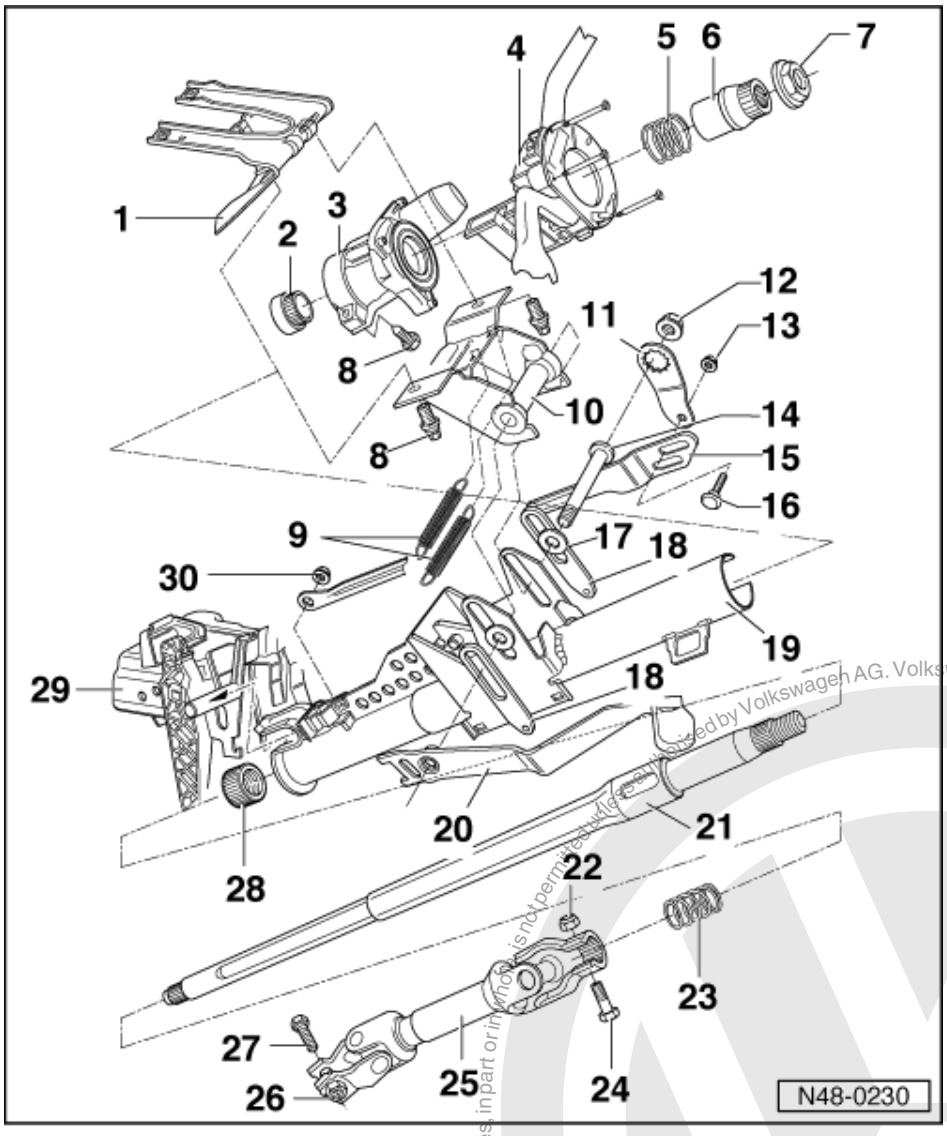

Notes:

- Always renew self-locking nuts and bolts.
- Welding and straightening work on steering components is not permitted.

1 Support
2 Support ring
- With washer

3 Steering lock housing
- Removing and installing lock cylinder

=> Electrical system; Repair group 96; Servicing steering column switch Servicing steering column switch

satelettronica
Protected by copyright. Copying for private or commercial purposes, in part or in whole, is not permitted unless authorised by Volkswagen AG. Volkswagen AG does not guarantee or accept any liability with respect to the correctness of information in this document. Copyright by Volkswagen AG.

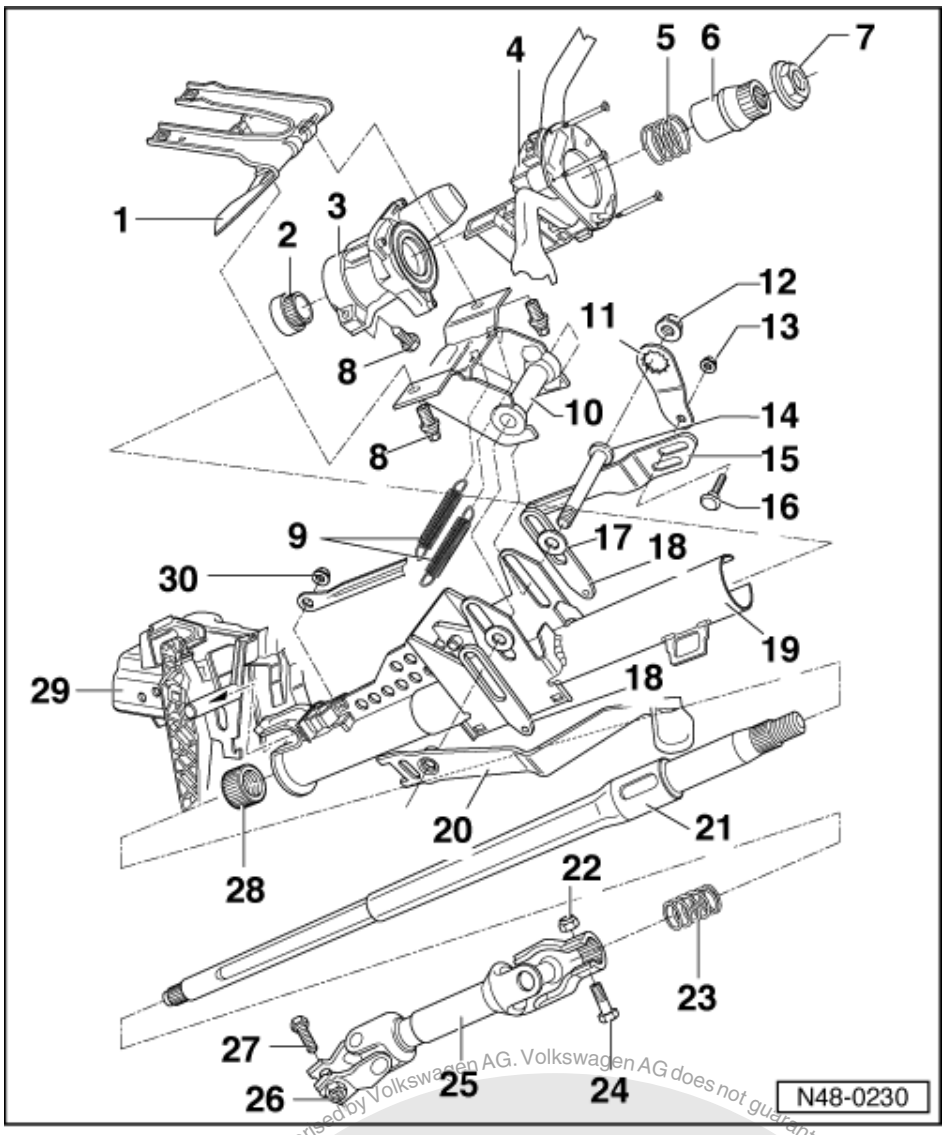

4 Steering column switch
- Servicing

=> Electrical system; Repair group 96; Servicing steering column switch Servicing steering column switch

5 Spring
6 Splined adapter sleeve
7 Hexagon nut, 50 Nm
8 Shear bolt
- Tighten until head shears off
- Drill out to remove

Warning! Wear protective goggles!

9 Spring
10 Mounting bracket
- Before assembling, coat side sliding surfaces with MOS 2 grease

Protected by copyright. Copying for private or commercial purposes, in part or in whole, is not permitted unless authorised by Volkswagen AG. Volkswagen AG does not guarantee or accept any liability with respect to the correctness of information in this document. Copyright by Volkswagen AG.
satelettronica

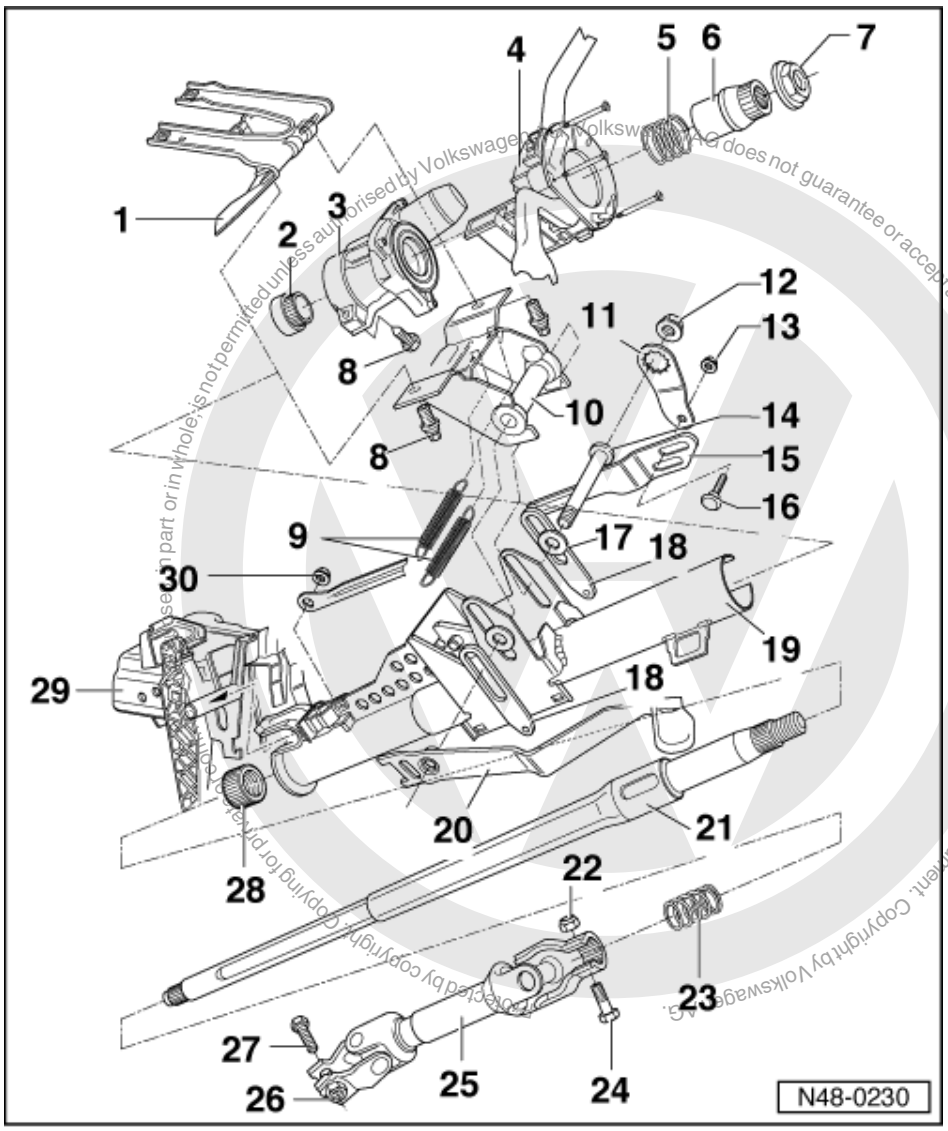

11 Locking plate
12 Hexagon nut, 8 Nm
- Left-hand thread

13 Hexagon nut, 6 Nm
14 Clamping bolt with left-hand thread
15 Slide rod
16 Bolt
17 Washer
18 Packing plate
19 Column tube
20 Operating lever
21 Steering column

satelettronica

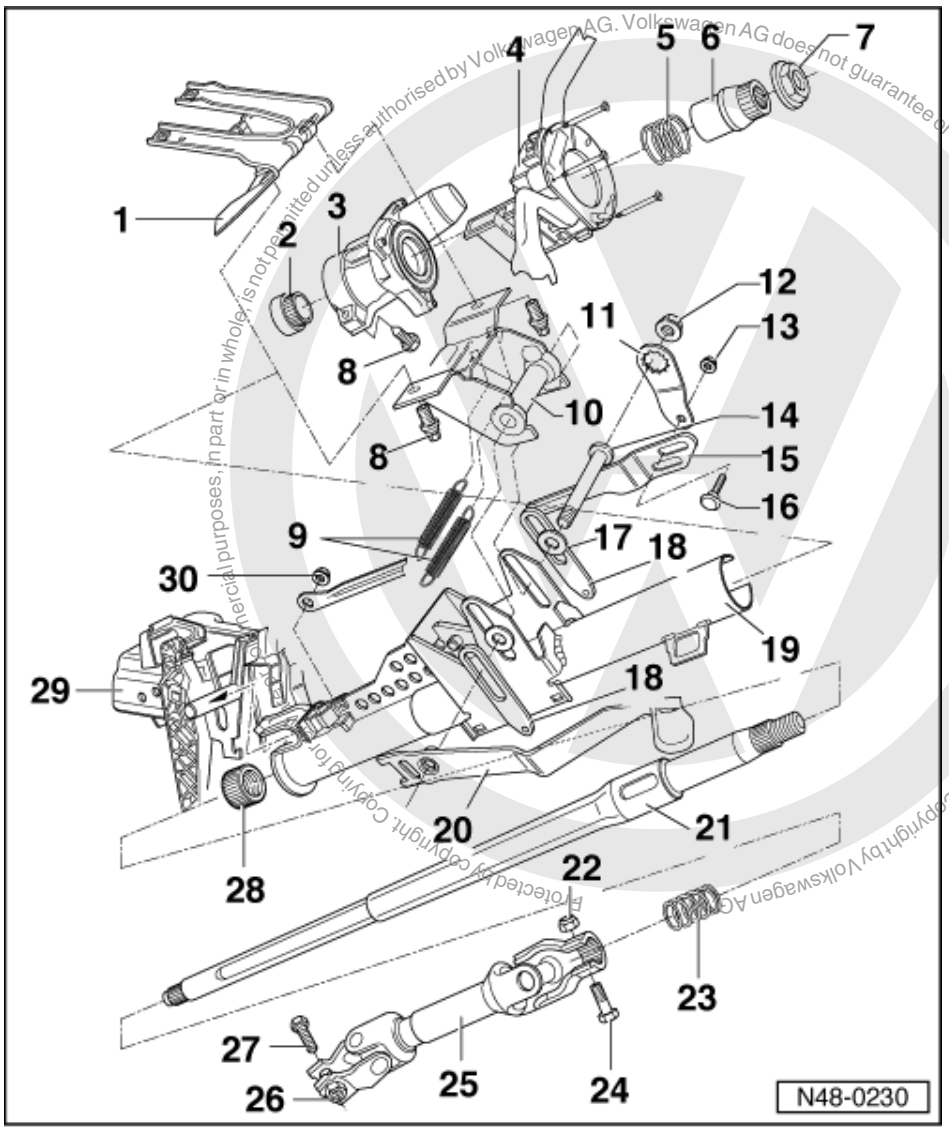

22 Self-locking hexagon nut, 25 Nm

23 Lower spring

24 Hexagon bolt

25 Steering column universal joint shaft

26 Captivated nut

- Remove captivation from joint and replace nut
- Do not re-use captivation
- Use self-locking nut like item - 22 -

27 Hexagon bolt, 30 Nm

28 Lower steering column bearing

- Pull out=>Page 139
- Drive in with synthetic head hammer

29 Bearing bracket

30 Hexagon nut, 6 Nm

satelettronica

1.13 - Dismantling and assembling column tube and steering column

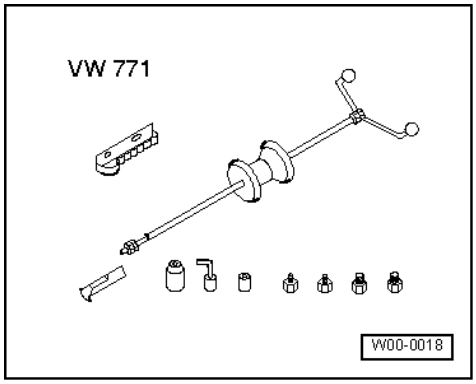

Special tools and workshop equipment required

- Puller VW 771

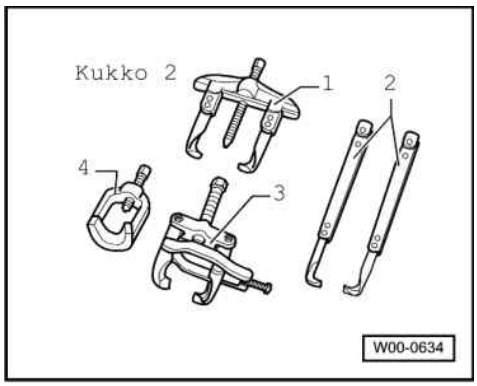

- 3 - Kukko 204/2 Puller with tensioning bar

Dismantling

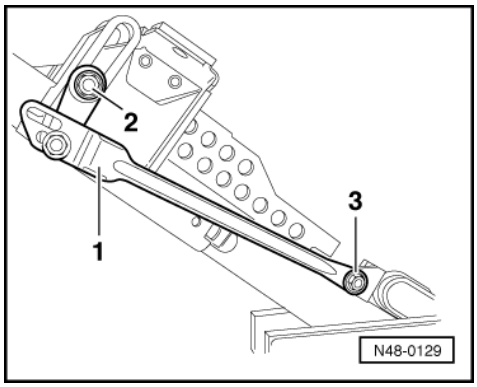

Column tube and steering column can only be dismantled once they had been removed from the vehicle.
Removing and installing column tube and steering column => Page 130 .

- -> Remove nut -2- (left-hand thread) and nut -3- and take off slide rod -1-.

Protected by copyright. Copying for private or commercial purposes, in part or in whole, is not permitted unless authorised by Volkswagen AG. Volkswagen AG does not guarantee or accept any liability with respect to the correctness of information in this document. Copyright by Volkswagen AG.
satelettronica

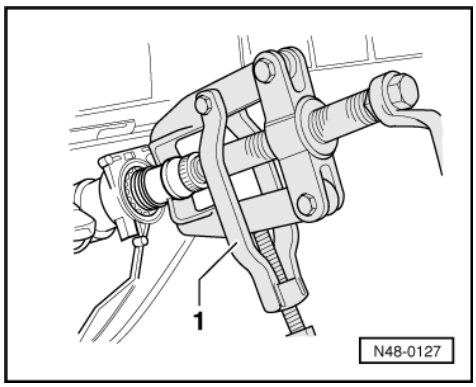

- -> Pulling off multi-spline adapter sleeve and removing steering lock housing.

Only use puller with leg clamp (e.g. Kukko 204/2 commercial type).

- Unscrew drive shaft from steering column.
- Remove steering column from column tube.

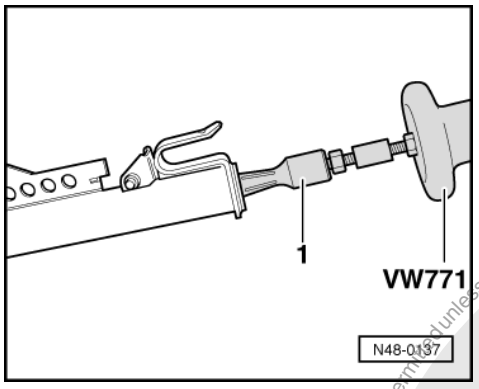

- -> Pulling lower bearing out of column tube

  1 - Internal puller e.g. Kukko 21/3

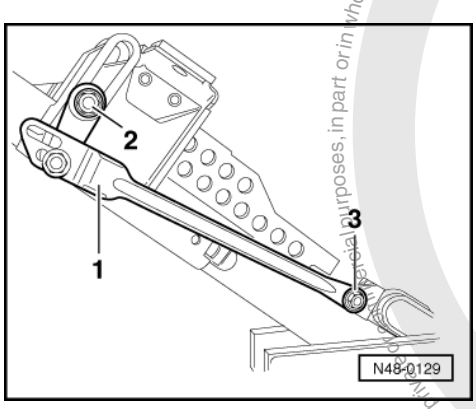

- -> Remove nut -2- (left-hand thread) and nut -3- and take off slide rod -1-.

satelettronica
Protected by copyright. Copyright by Volkswagen AG.
Copyright by Volkswagen AG. Volkswagen AG does not guarantee or accept any liability with respect to the correctness of information in this document. Copying for private or commercial purposes, in part or in whole, is not permitted unless authorised by Volkswagen AG.

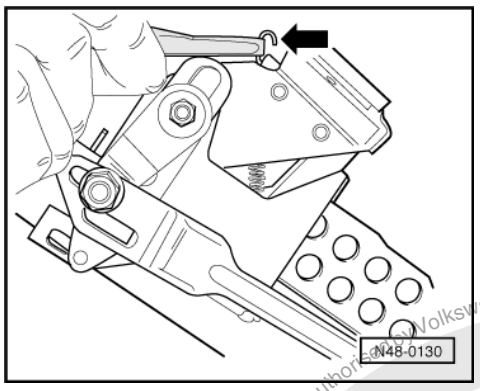

- -> Unhook spring e.g. with water pump pliers.

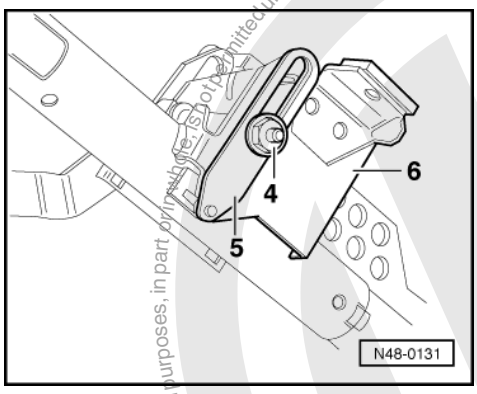

- -> Remove clamping bolt -4- (Left-hand thread) from operating lever.
- Take off clamping plate -5- and washer.
- Pull out clamping bolt -4-.
- Remove mounting bracket -6- from column tube.

Assembling

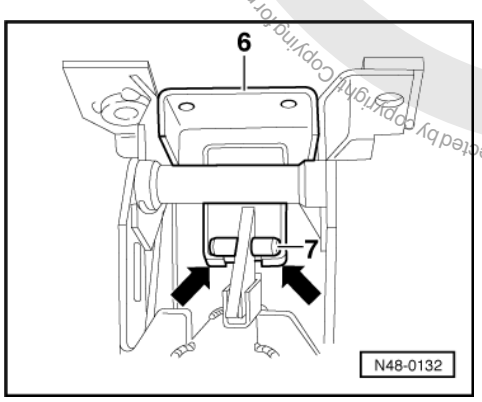

- -> Insert mounting bracket -6- in mounting on column tube.

Observe installation position: Plate tabs (arrows) must be guided under the spring pin -7-.

Protected by copyright. Copying for private or commercial purposes, in part or in whole, is not permitted unless authorised by Volkswagen AG. Volkswagen AG does not guarantee or accept any liability with respect to the correctness of information in this document. Copyright by Volkswagen AG.
satelettronica

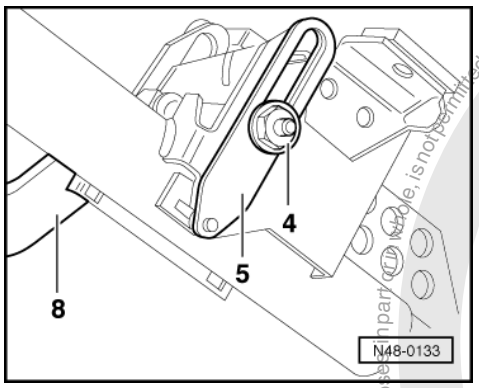

- -> Insert clamping bolt -4- with clamping plates -5- and washers.
- Bolt clamping bolt -4- to operating lever -8- (left-hand thread).

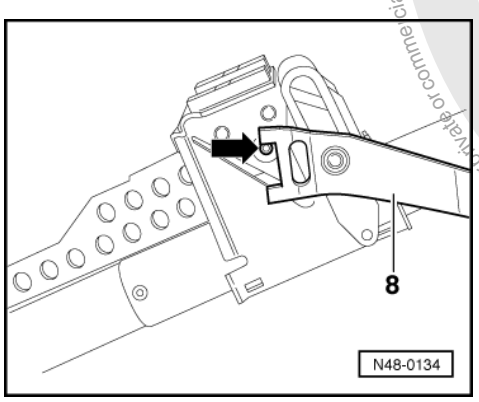

- -> Position operating lever against upper stop (arrow) and tighten clamping bolt to 22 ... 24 Nm (left-hand thread).

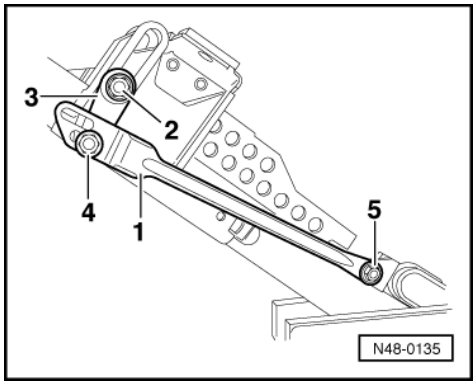

- -> Install slide rod -1- with locking plate -3-, if necessary loosen nut -4-. Upper or lower slots can be used.

Installing the locking plate -3- at an angle is permissible.

The installation position of the locking plate is determined by the position of the hexagon on tensioning bolt -4-.

- Tighten -4- (6 Nm).
- Tighten nut -2- (left-hand thread 8 Nm).
- Tighten nut -5- (6 Nm).

- Hook spring in e.g. with water pump pliers.
- Drive lower steering column bearing in with a synthetic head hammer.
- Slide support ring onto steering column.
- Guide steering column into column tube from above.
- Fit lower spring and universal joint shaft onto steering column and secure (25 Nm).

Protected by copyright. Copying for private or commercial purposes, in part or in whole, is not permitted unless authorised by Volkswagen AG. Volkswagen AG does not guarantee or accept any liability with respect to the correctness of information in this document. Copyright by Volkswagen AG.
satelettronica

- Fit steering lock housing and bolt loosely together with new shear head bolt.

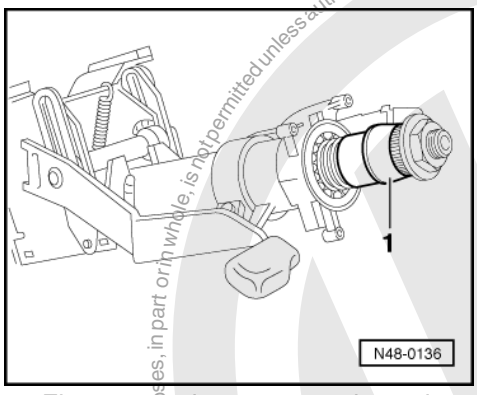

- Fit upper spring onto steering column.
- -> Place splined adapter sleeve on steering column and fit hexagon nut.
- Tighten hexagon nut on steering column to 50 Nm.
- Remove nut again.
- Install steering column with column tube in vehicle.
- Tighten shear head bolts for column tube and steering lock housing until head shears off.

Protected by copyright. Copying for private or commercial purposes, in part or in whole, is not permitted unless authorised by Volkswagen AG. Volkswagen AG does not guarantee or accept any liability with respect to the correctness of information in this document. Copyright by Volkswagen AG.
satelettronica

1.14 - Assembly overview steering column, column tube; Vehicle identification No. 6N W 000 001>

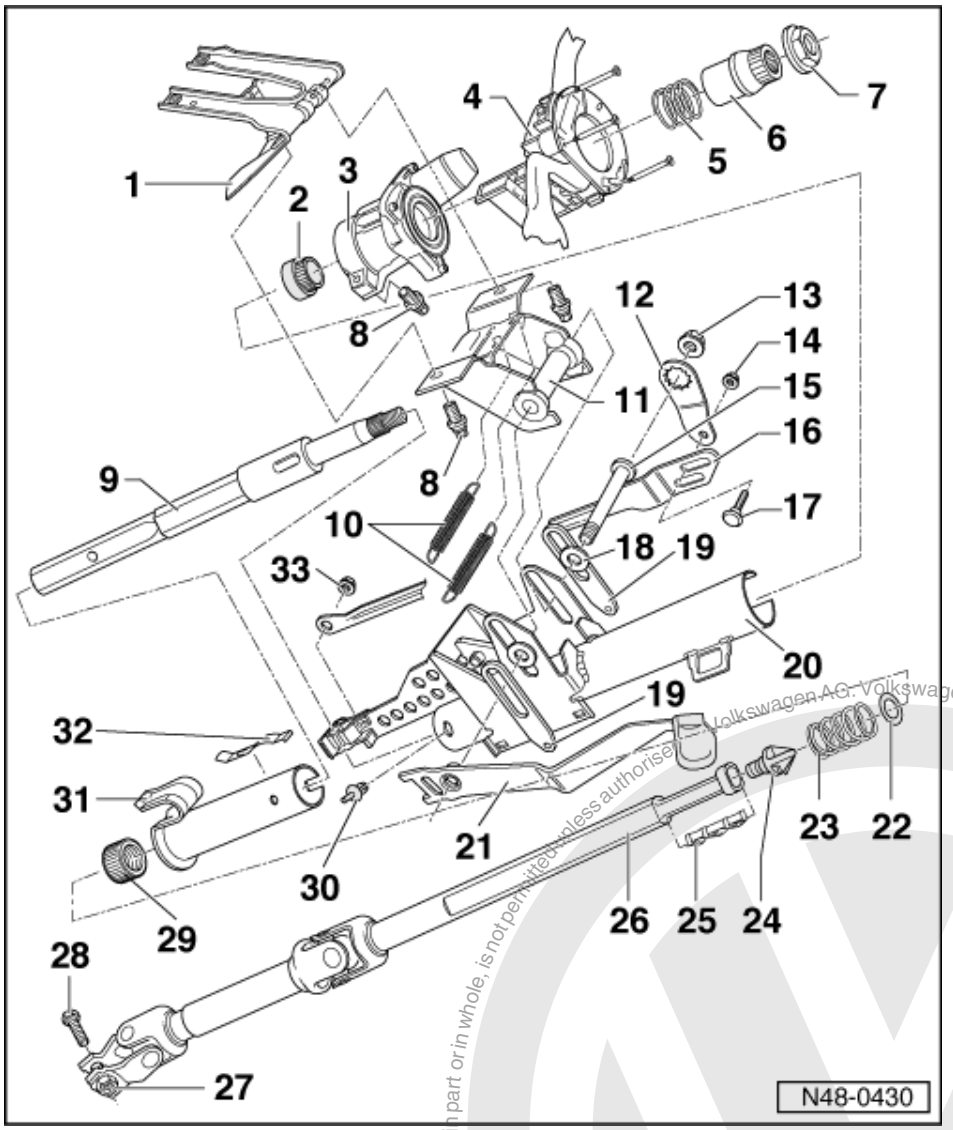

From vehicle identification No. 6N W 000 001 a modified steering column has been introduced.

The universal joint shaft can no longer be unscrewed from the steering column as it is peened to the steering column.

The upper section of the steering column is equipped with a torque overload clutch. This ensures that the steering wheel locks remains undamaged if force is used.

Notes:

- Always renew self-locking nuts and bolts.
- Welding and straightening work on steering components is not permitted.

1 Support

satelettronica
Protected by copyright. Copying for private or commercial purposes, in part or in whole, is not permitted unless authorised by Volkswagen AG. Volkswagen AG does not guarantee or accept any liability with respect to the correctness of information in this document. Copyright by Volkswagen AG.

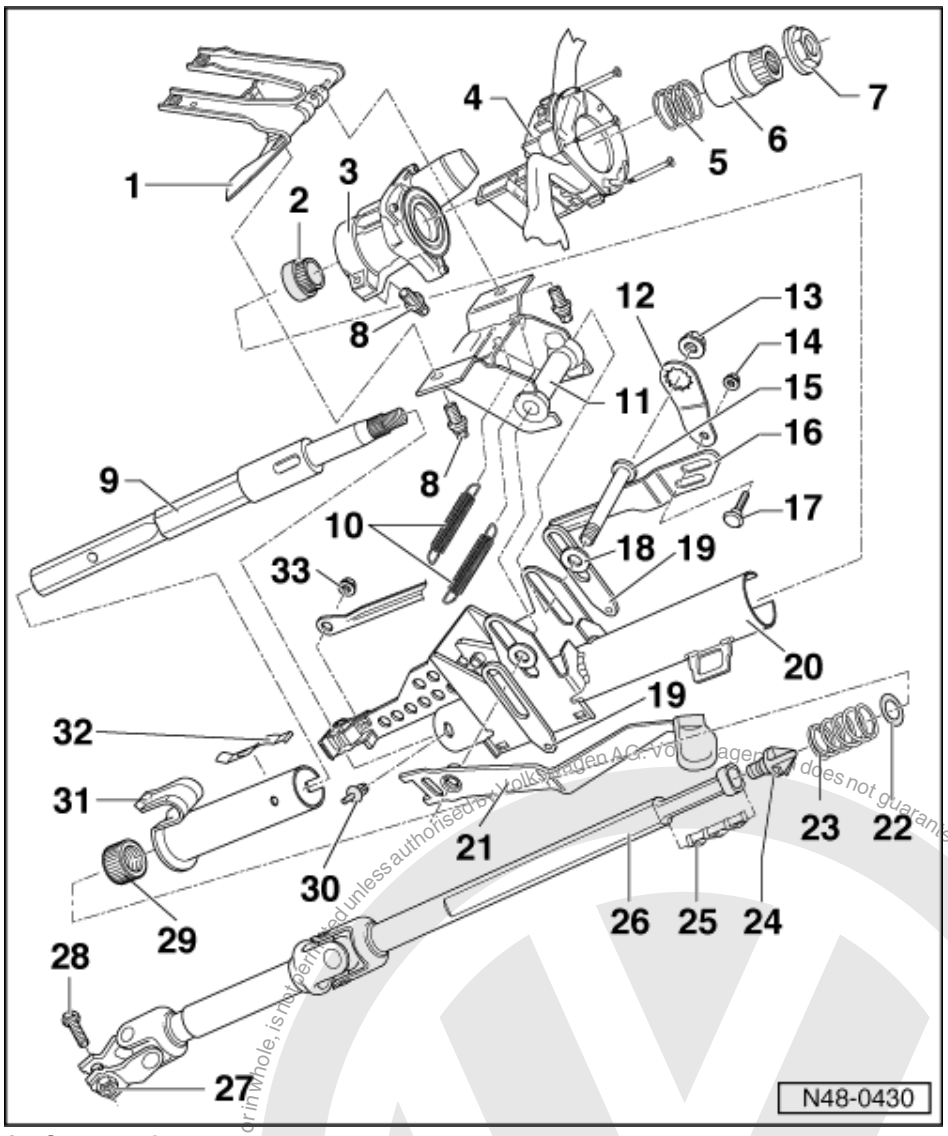

2 Support ring
- With washer

3 Steering lock housing
- Removing and installing lock cylinder

=> Electrical system; Repair group 96; Servicing steering column switch Servicing steering column switch

4 Steering column switch
- Servicing

=> Electrical system; Repair group 97; Servicing steering column switch Servicing steering column switch

5 Spring
6 Splined adapter sleeve
7 Hexagon nut, 50 Nm
8 Shear bolt
- Tighten until head shears off
- Drill out to remove

Protected by copyright. Copying for private or commercial purposes, in part or in whole, is not permitted unless authorised by Volkswagen AG. Volkswagen AG does not guarantee or accept any liability with respect to the correctness of information in this document. Copyright by Volkswagen AG.
satelettronica

Warning!
Wear protective goggles!

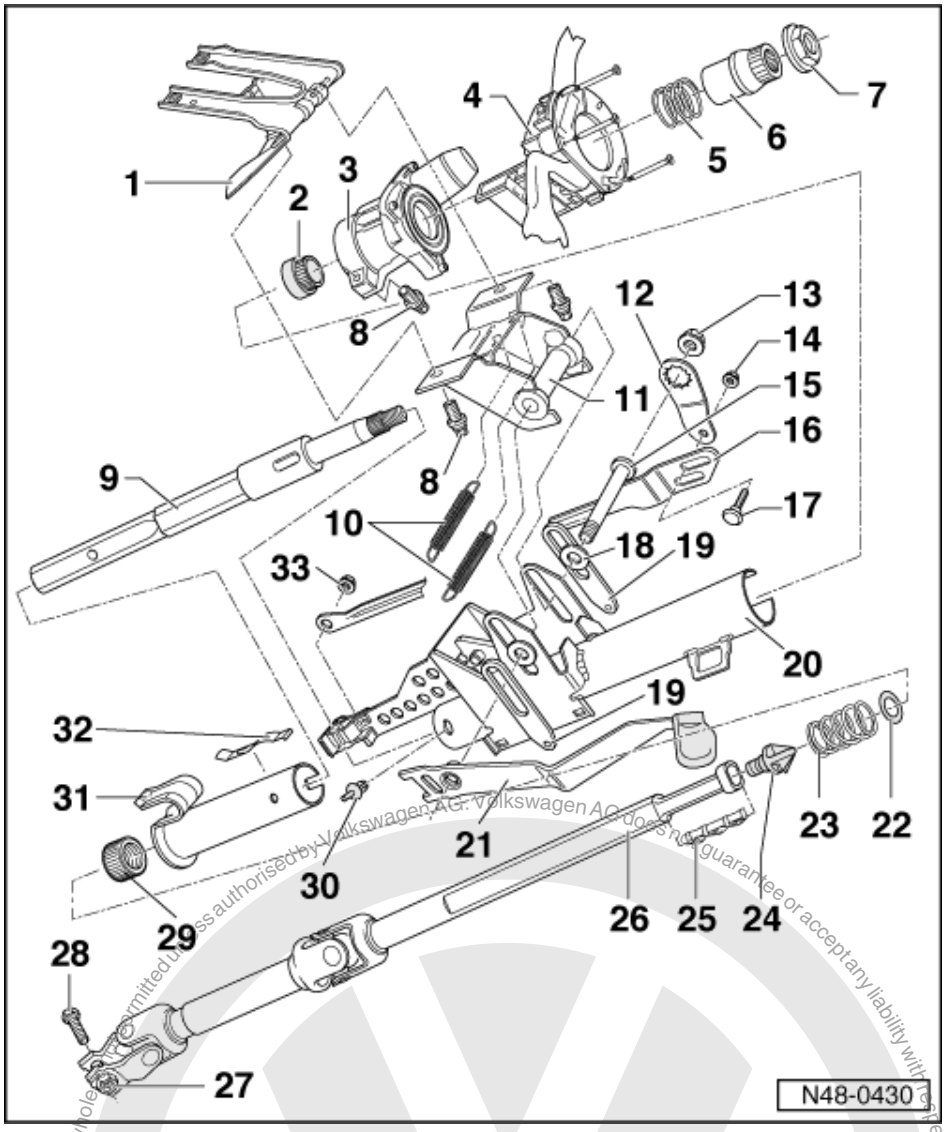

9 Steering column upper section
- With torque overload clutch, cannot be dismantled
  If a moment of over 100 Nm is exerted on steering wheel then the steering column will also turn without damaging the locking pin.

10 Spring

11 Mounting bracket
- Before assembling, coat side sliding surfaces with MOS 2 grease

12 Locking plate

13 Hexagon nut, 8 Nm
- Left-hand thread

14 Hexagon nut, 6 Nm

15 Clamping bolt with left-hand thread

Protected by copyright. Copying for private or commercial purposes, in part or in whole, is not permitted unless authorised by Volkswagen AG. Volkswagen AG does not guarantee or accept any liability with respect to the correctness of information in this document. Copyright by Volkswagen AG.
satelettronica

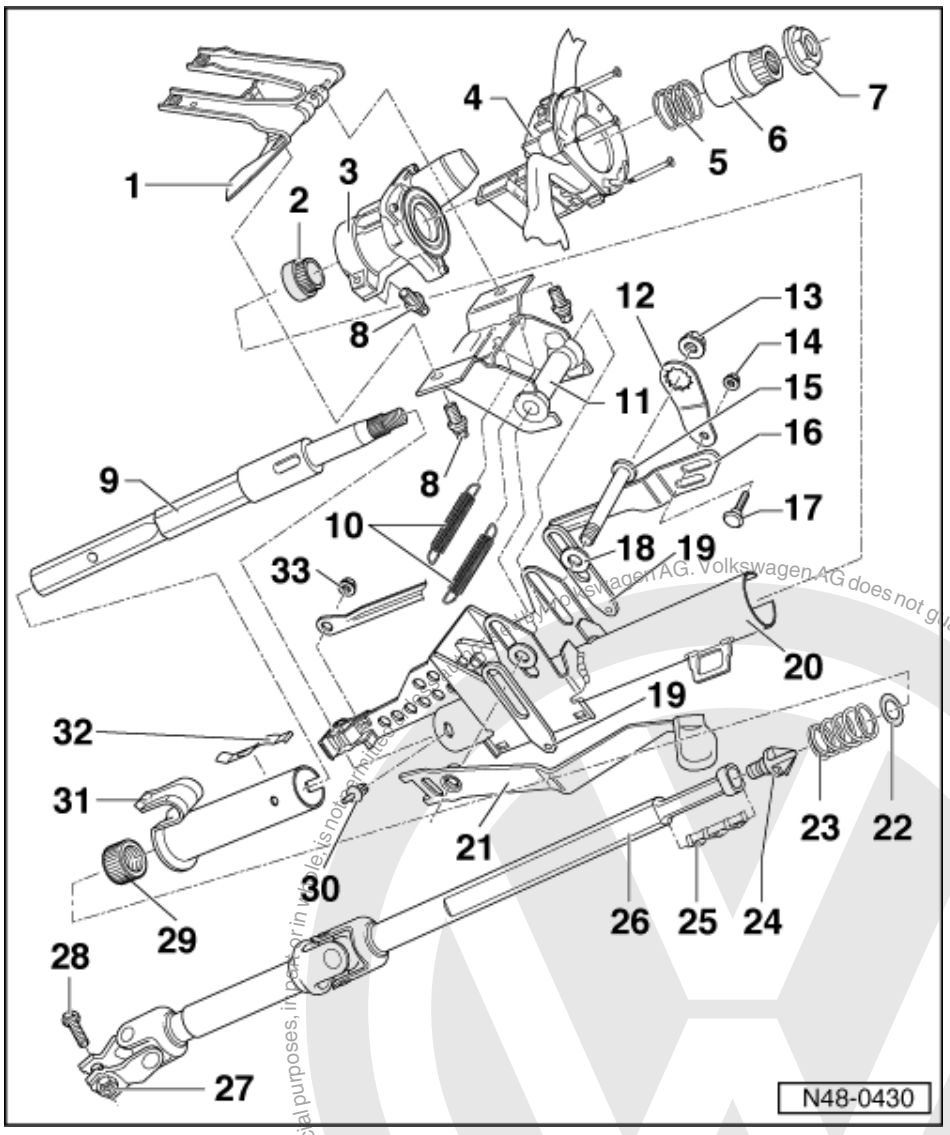

16 Slide rod
17 Bolt
18 Washer
19 Packing plate
20 Column tube, upper part
21 Operating lever
22 Rubber ring
23 Lower spring
24 Assembly drift
25 Securing spring
- Renew each time after removing

26 Steering column lower section with universal joint shaft

Protected by copyright. Copying for private or commercial purposes, in part or in whole is not permitted unless authorised by Volkswagen AG. Volkswagen AG does not guarantee or accept any liability with respect to the correctness of information in this document. Copyright by Volkswagen AG.
satelettronica

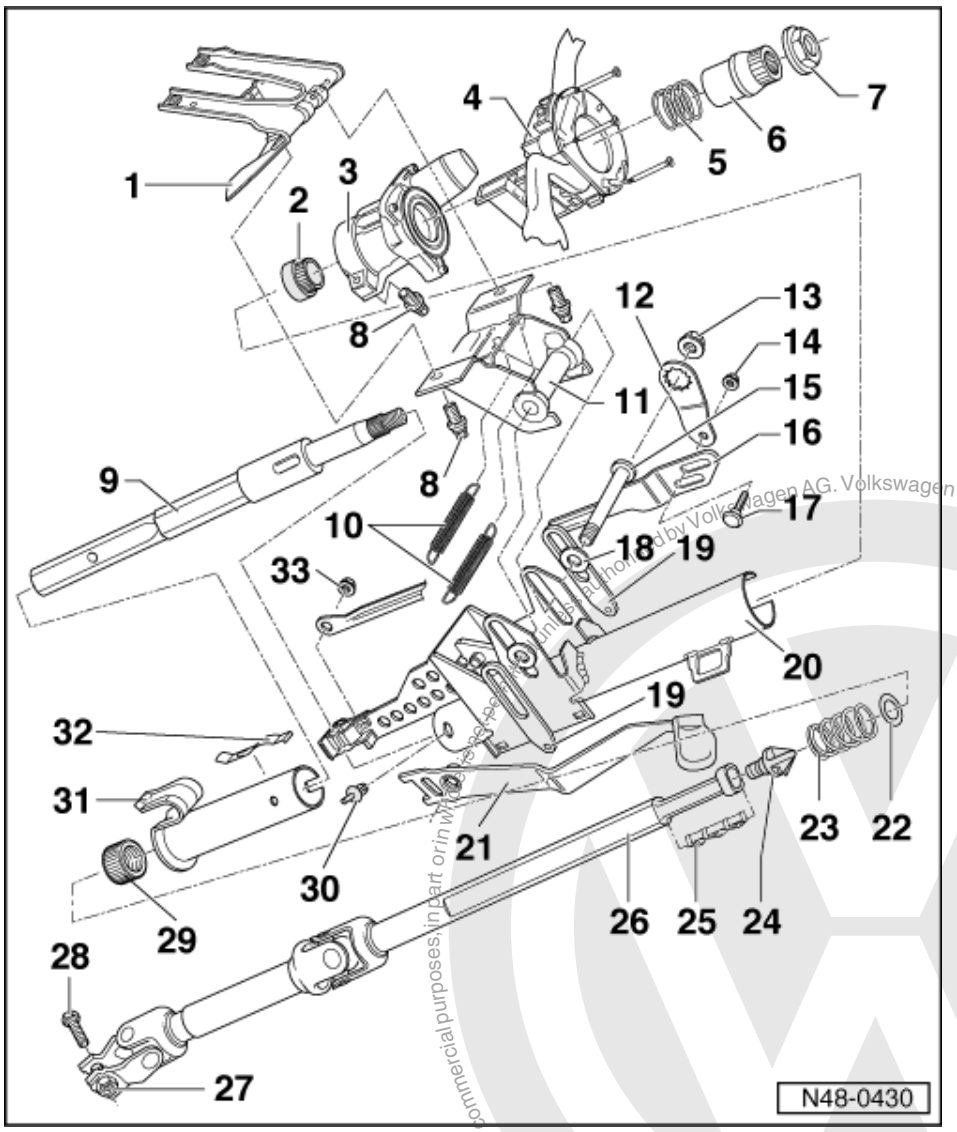

27 Captivated nut
- Remove captivation from joint and replace nut
- Do not re-use captivation
- Use self-locking nut

28 Hexagon bolt, 30 Nm

29 Lower steering column bearing
- Drive out using drift VW 295
- Drive in with synthetic head hammer

30 Spreader rivet
- Renew each time after removing

31 Column tube, lower part

32 Securing spring
- Renew each time after removing

33 Hexagon nut, 6 Nm

Protected by copyright. Copying for private or commercial purposes, in part or in whole, is not permitted unless authorised by Volkswagen AG. Volkswagen AG does not guarantee or accept any liability with respect to the correctness of information in this document. Copyright by Volkswagen AG.
satelettronica

1.15 - Dismantling and assembling column tube and steering column

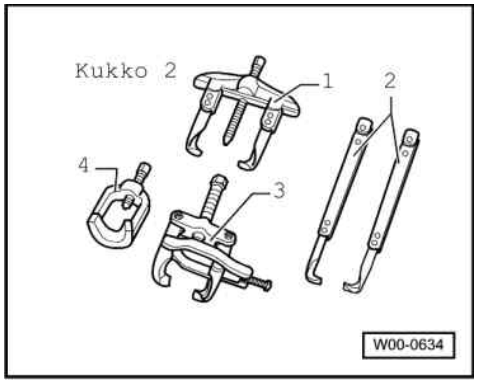

Special tools, testers and auxiliary items

- 3 - Kukko 204/2 puller with tensioning bar

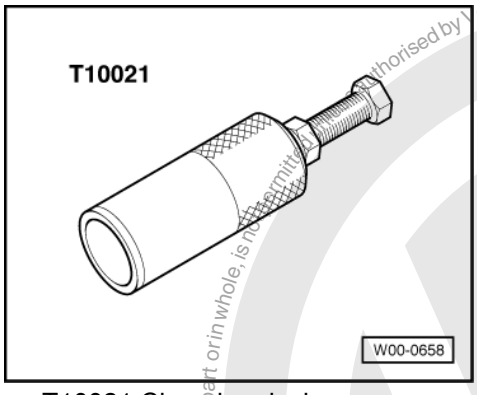

- T10021 Clamping device

Dismantling

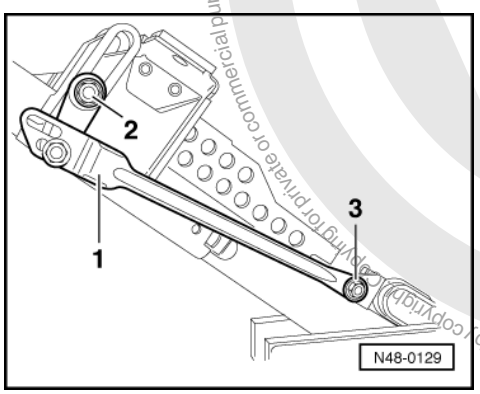

Column tube and steering column can only be dismantled once they had been removed from the vehicle.
Removing and installing column tube and steering column => Page 130 .

- -> Remove nut -2- (left-hand thread) and nut -3- and take off slide rod -1-.

Protected by copyright. Copying for private or commercial purposes, in part or in whole, is not permitted unless authorised by Volkswagen AG. Volkswagen AG does not guarantee or accept any liability with respect to the correctness of information in this document. Copyright by Volkswagen AG.
satelettronica

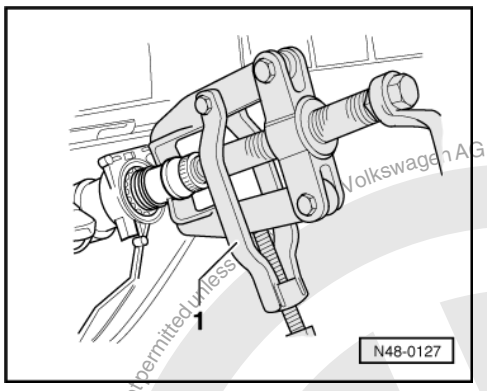

- -> Pulling off multi-spline adapter sleeve and removing steering lock housing.

Only use puller with leg clamp (e.g. Kukko 204/2 commercial type).

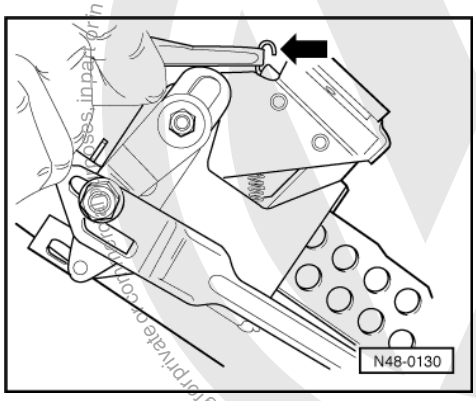

- -> Unhook spring e.g. with water pump pliers.

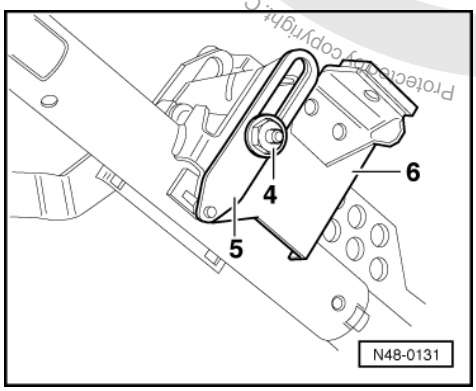

- -> Remove clamping bolt -4- (Left-hand thread) from operating lever.
- Take off clamping plate -5- and washer.
- Pull out clamping bolt -4-.
- Remove mounting bracket -6- from column tube.

Protected by copyright. Copyright by Volkswagen AG. Volkswagen AG does not guarantee or accept any liability with respect to the correctness of information in this document. Copyright by Volkswagen AG. Reproduction, in part or in whole, is not permitted unless
satelettronica

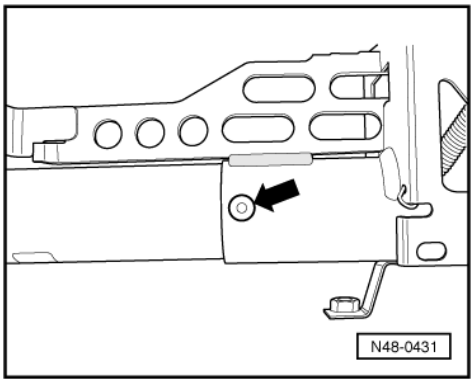

- -> Remove spreader rivet.

When doing this the pin of the spreader rivet will fall into the column tube and it must be removed when dismantling the steering column/column tube.

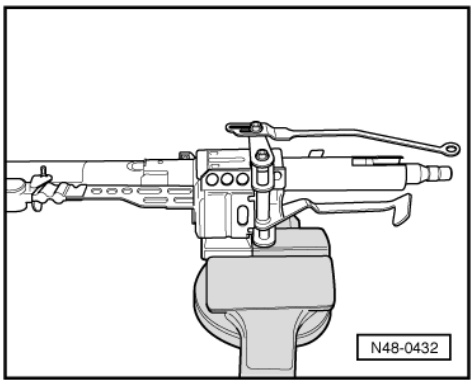

- -> Clamp column tube upper part using vice clamps.

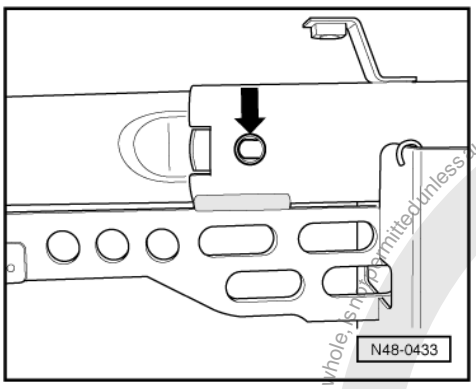

- -> Release securing spring and separate column tube.

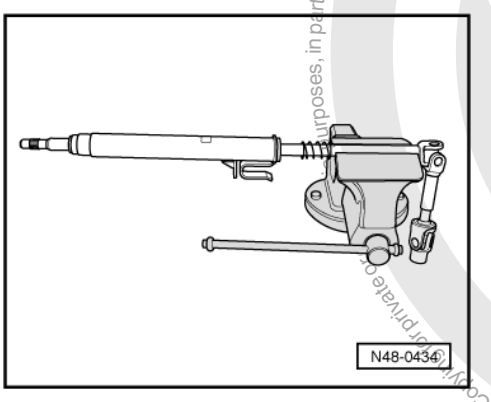

Protected by copyright. Copying for private or commercial purposes, in part or in whole, is not permitted unless authorised by Volkswagen AG. Volkswagen AG does not guarantee or accept any liability with respect to the correctness of information in this document. Copyright by Volkswagen AG.

satelettronica

- -> Clamp column tube lower part using vice clamps.

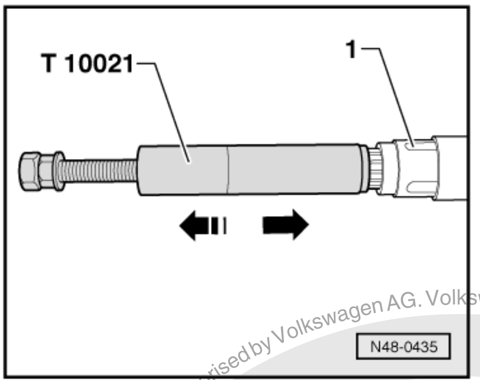

- -> Assemble clamping device T10021 (nut turned back as shown in illustration) and pull steering tube apart.
- To do this, slide the sleeve forcibly back and forth on the threaded spindle -arrows- ensuring that the nut is struck forcibly.

The special tool T10021 is used as a slide hammer in this case.

- Continue hammering until the steering tube is against its stop.

Now the securing spring stops them moving further apart.

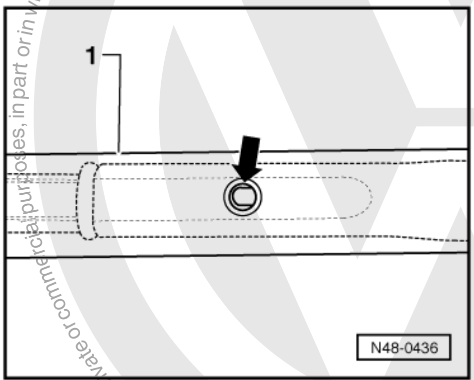

- Unclamp steering tube.
- -> Release securing spring -arrow- by driving through hole in column tube lower part -1- using a drive and light blows of a hammer.
- Clamp steering tube.
- Pull steering tube apart completely.
- Pull steering tube lower part out of column tube lower part.
- Take rubber ring and spreader rivet pin out of column tube lower part.

Assembling

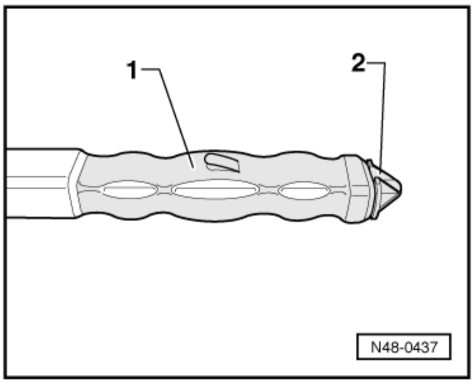

- Slide lower spring onto lower steering tube.
- Grease seat of securing spring on steering tube and securing spring all-round using universal grease G 052 735 A2.

Protected by copyright. Copying for private or commercial purposes, in part or in whole, is not permitted unless authorised by Volkswagen AG. Volkswagen AG does not guarantee or accept any liability with respect to the correctness of information in this document. Copyright by Volkswagen AG.
satelettronica

- -> Fit securing spring -1- and assembly aid -2-.

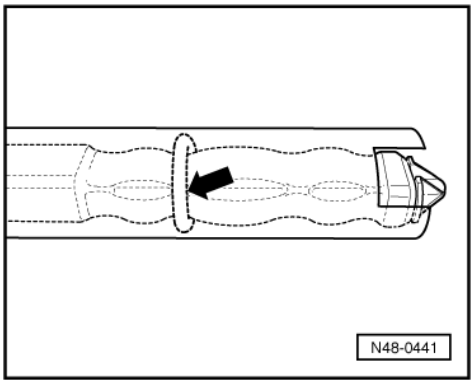

- -> Insert lower steering tube into column tube lower part and slide on rubber ring -arrow-.

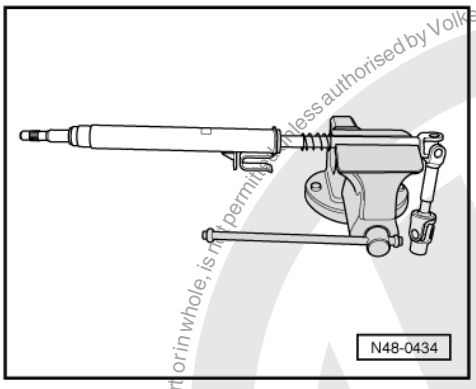

- -> Connect steering tubes together and clamp.

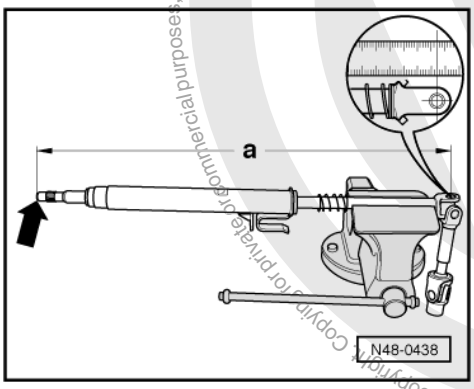

- -> Set steering tubes to dimension "a".

Dimension "a" = 627 mm

Protected by copyright. Copyright by Volkswagen AG.
Copyright for private or commercial purposes, in part or in whole, is not permitted unless authorised by Volkswagen AG. Volkswagen AG does not guarantee or accept any liability with respect to the correctness of information in this document.
satelettronica

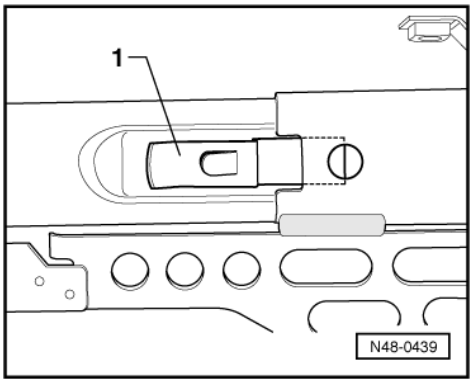

- -> Insert securing spring -1- and connect column tubes together.

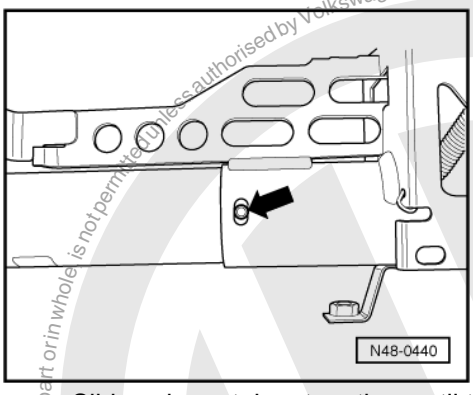

- -> Slide column tubes together until the holes are aligned.
- Fit spreader rivet.

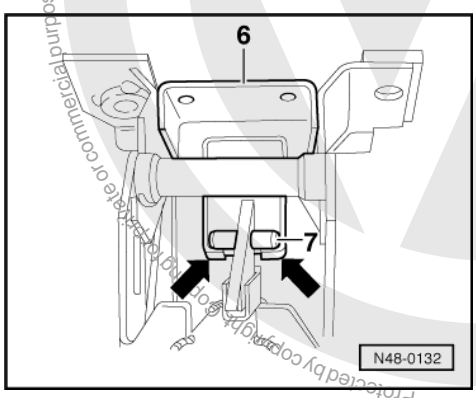

- -> Insert mounting bracket -6- in mounting on column tube.

Observe installation position: Plate tabs (arrows) must be guided under the spring pin -7-.

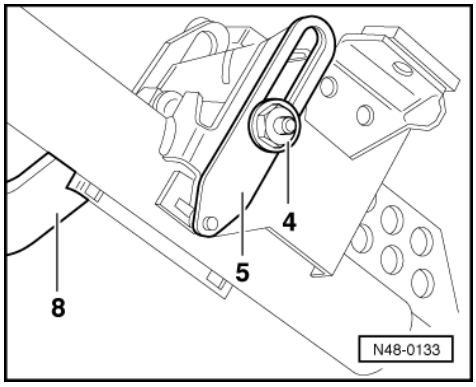

Protected by copyright. Copying for private or commercial purposes, in part or in whole, is not permitted unless authorised by Volkswagen AG. Volkswagen AG does not guarantee or accept any liability with respect to the correctness of information in this document. Copyright by Volkswagen AG.
satelettronica

- -> Insert clamping bolt -4- with clamping plates -5- and washers.
- Bolt clamping bolt -4- to operating lever -8- (left-hand thread).

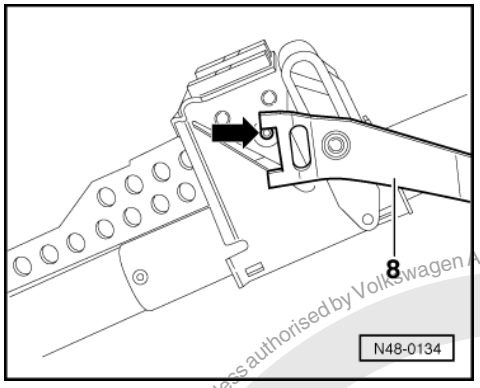

- -> Position operating lever against upper stop (arrow) and tighten clamping bolt to 22 ... 24 Nm (left-hand thread).

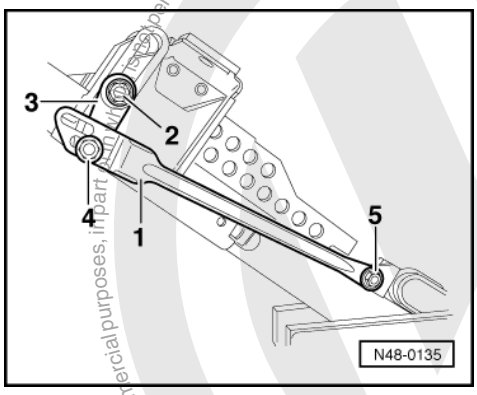

- -> Install slide rod -1- with locking plate -3-, if necessary loosen nut -4-. Upper or lower slots can be used.

Installing the locking plate -3- at an angle is permissible.

The installation position of the locking plate is determined by the position of the hexagon on tensioning bolt -4-.

- Tighten -4- (6 Nm).
- Tighten nut -2- (left-hand thread 8 Nm).
- Tighten nut -5- (6 Nm).
- Hook spring in e.g. with water pump pliers.

- Slide support ring onto steering column.

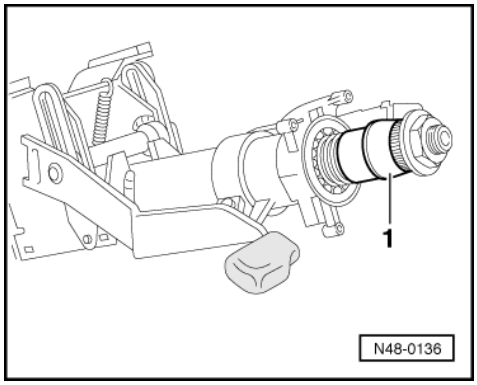

- Fit steering lock housing and bolt loosely together with new shear head bolt.
- Fit upper spring onto steering column.
- -> Place splined adapter sleeve on steering column and fit hexagon nut.
- Tighten hexagon nut on steering column to 50 Nm.
- Remove nut again.

Protected by copyright. Copying for private or commercial purposes, in part or in whole, is not permitted unless authorised by Volkswagen AG. Volkswagen AG does not guarantee or accept any liability with respect to the correctness of information in this document. Copyright by Volkswagen AG.
satelettronica

- Install steering column with column tube in vehicle.

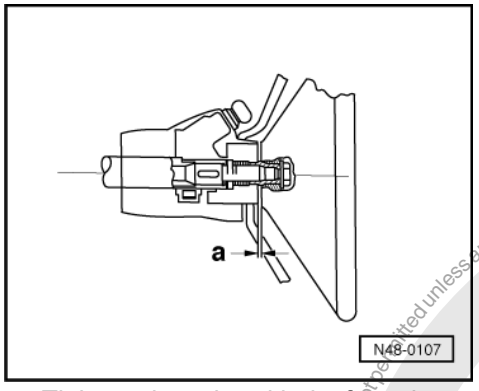

- Tighten shear-head bolts for column tube until head shears off.

Checking distance between steering wheel and steering lock housing trim

Steering column switch and steering wheel installed

- -> Adjust to dimension -a- by moving steering lock housing.

Dimension -a-: 2.0 ... 5.5 mm

2 - Servicing mechanical steering box

2.1 - Servicing mechanical steering box

2.2 - Removing and installing mechanical steering box

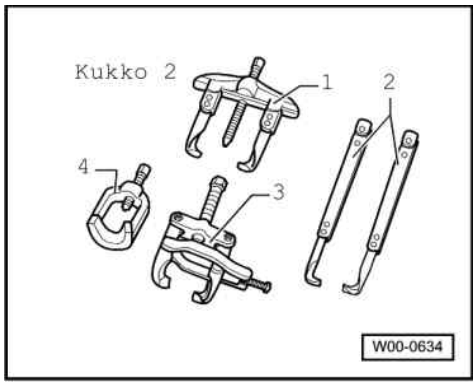

Special tools and workshop equipment required

- 4 - Kukko 128/2 Puller

Protected by copyright. Copying for private or commercial purposes, in part or in whole, is not permitted unless authorised by Volkswagen AG. Volkswagen AG does not guarantee or accept any liability with respect to the correctness of information in this document. Copyright by Volkswagen AG.
satelettronica

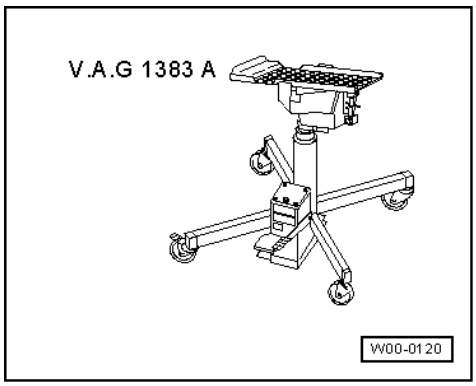

◆ V.A.G 1383 A Gearbox jack

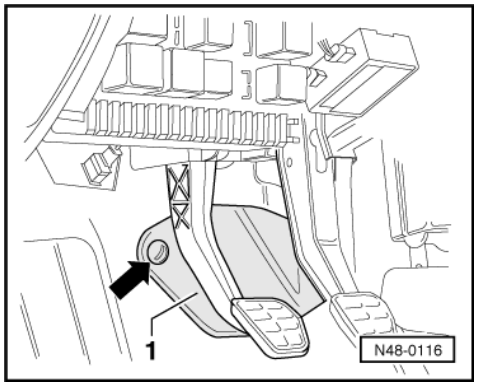

- -> Removing cover -1-.

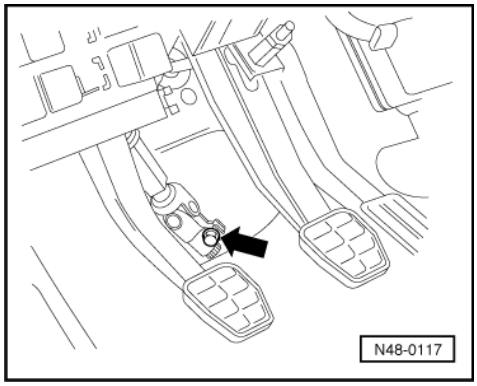

- -> Remove joint bolt.

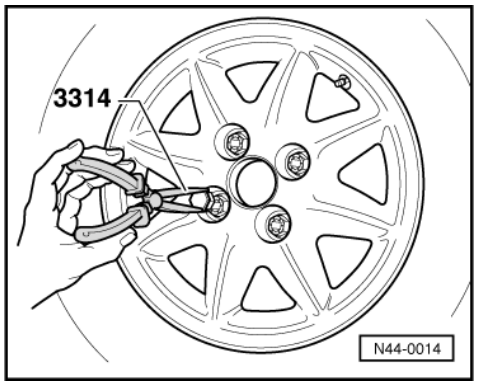

- -> Take wheel bolt covers off and remove both front wheels.

Protected by copyright. Copying for private or commercial purposes, in part or in whole, is not permitted unless authorised by Volkswagen AG. Volkswagen AG does not guarantee or accept any liability with respect to the correctness of information in this document. Copyright by Volkswagen AG.
satelettronica

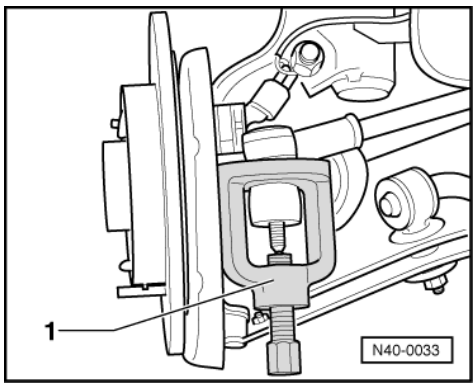

- -> Press track rod end off steering arm.

  1 - Ball joint splitter (commercial type) e.g. Kukko No. 128/2

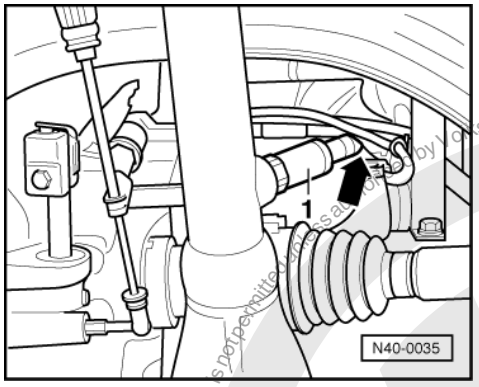

Vehicles ▸09.99

- -> Unclip Lambda probe -1- wiring (arrow) at retainer.

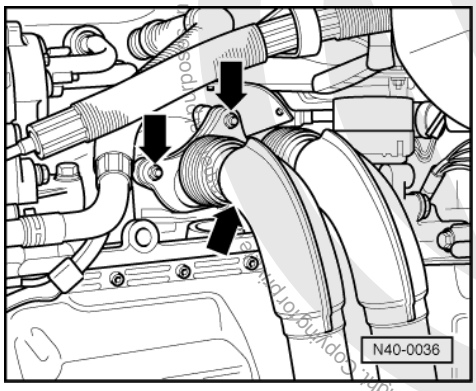

- -> Unbolt exhaust pipe.

Protected by copyright. Copying for private or commercial purposes, in part or in whole, is not permitted unless authorised by Volkswagen AG. Volkswagen AG does not guarantee or accept any liability with respect to the correctness of information in this document. Copyright by Volkswagen AG.
satelettronica

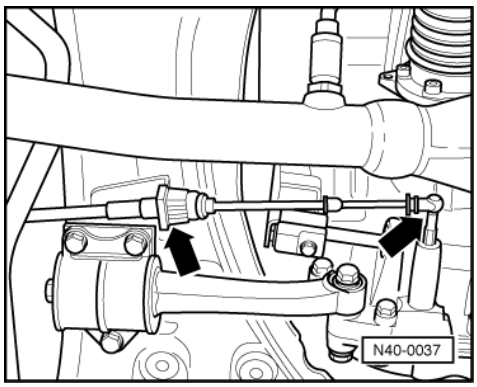

- -> Unclip cable (arrows).

Vehicles 10.99 ▸

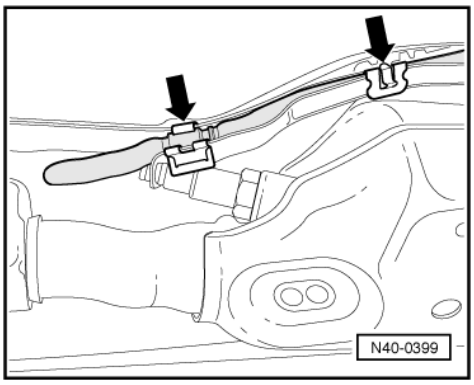

- -> Unclip Lambda probe cable.

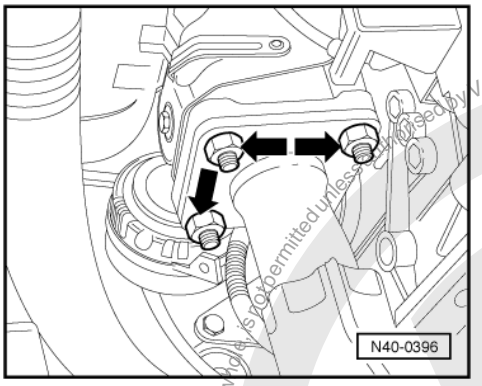

- -> Unbolt exhaust pipe.

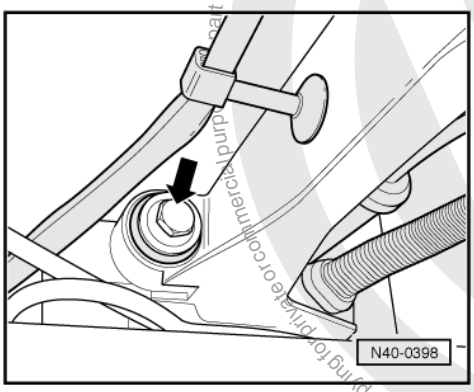

Protected by copyright. Copying for private or commercial purposes, in part or in whole, is not permitted unless authorised by Volkswagen AG. Volkswagen AG does not guarantee or accept any liability with respect to the correctness of information in this document. Copyright by Volkswagen AG.
satelettronica

- -> Remove bracket for gear change cables from assembly carrier (arrow).

  Only fitted on vehicles with cable operated gear change.

Continued for all vehicles

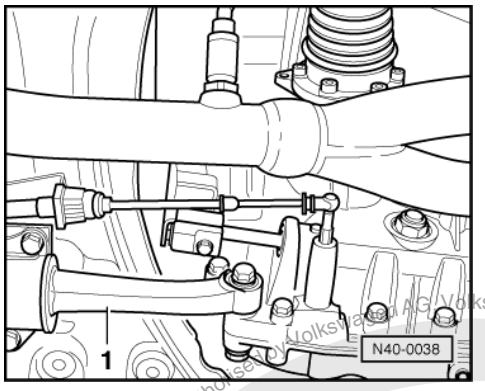

- -> Detach pendulum support -1- at gearbox.
- Remove bolts for steering box.
- Place gearbox jack V.A.G 1383 A under sub-frame.
- Remove bolts for sub-frame.
- Lower sub-frame using gearbox jack V.A.G 1383 A.
- Pull power-assisted steering box off steering column universal joint shaft and take out to side.

When removing the steering box ensure that the pinion splines do not stick or cant in the steering column universal joint shaft.

Installing

Notes:

- Coat steering box seals with lubricant, e.g. soft soap, before installing steering box.
- After fitting the steering box to the universal joint shaft ensure that the seal lies against the assembly plate without kinking and that the opening to the footwell is correctly sealed.
  Noises may be created and/or water may ingress.
- Ensure sealing surfaces are clean.

Install in reverse order

A 2nd mechanic may be required when fitting the pinion to the universal joint shaft.

Replace steering column joint captivated nut with a self-locking nut. The captivation need not be used again.

Before fitting bolts for the sub-frame, position steering box on sub-frame and insert bolts for steering box.

- Check front wheel alignment and position of steering wheel.

Copyright by Volkswagen AG. Volkswagen AG does not guarantee or accept any liability with respect to the correctness of information in this document. Copying for private or commercial purposes, in whole or in part, is not permitted unless authorised by Volkswagen AG. Volkswagen AG does not guarantee or accept any liability with respect to the correctness of information in this document. Copyright by Volkswagen AG.
satelettronica

2.3 - Assembly overview mechanical steering box

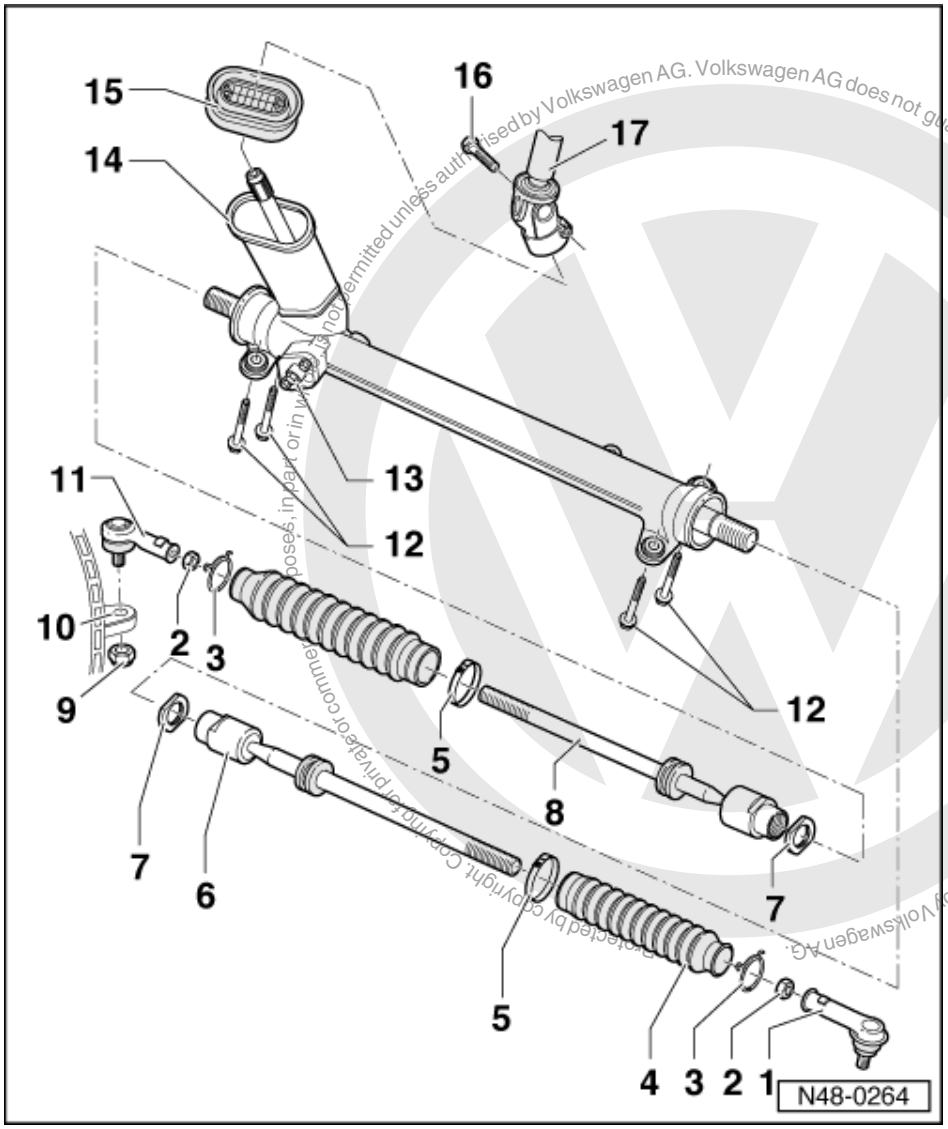

Copyrighted by Volkswagen AG. Volkswagen AG does not guarantee or accept any liability with respect to the correctness of information in this document. Copyright by Volkswagen AG. Copying for private or commercial purposes, in part or in whole, is not permitted unless authorised by Volkswagen AG.

satelettronica

Notes:

- It is not intended that repair work be carried out to the steering box. If faulty, the steering box must be replaced.
- Only use steering gear grease, Part No.
  AOF 063 000 04 for greasing the steering box. However, do not over-grease the steering box. The air vent holes must remain clear, otherwise damage will occur to the bellows.
- Renew self-locking nuts and bolts.
- Welding and straightening work on steering components is not permitted.

1 **Right-hand rack rod ball joint**
  - Checking: => Page 163
  - Pressing off steering arm => Page 157

2 **Hexagon nut, 50 Nm**

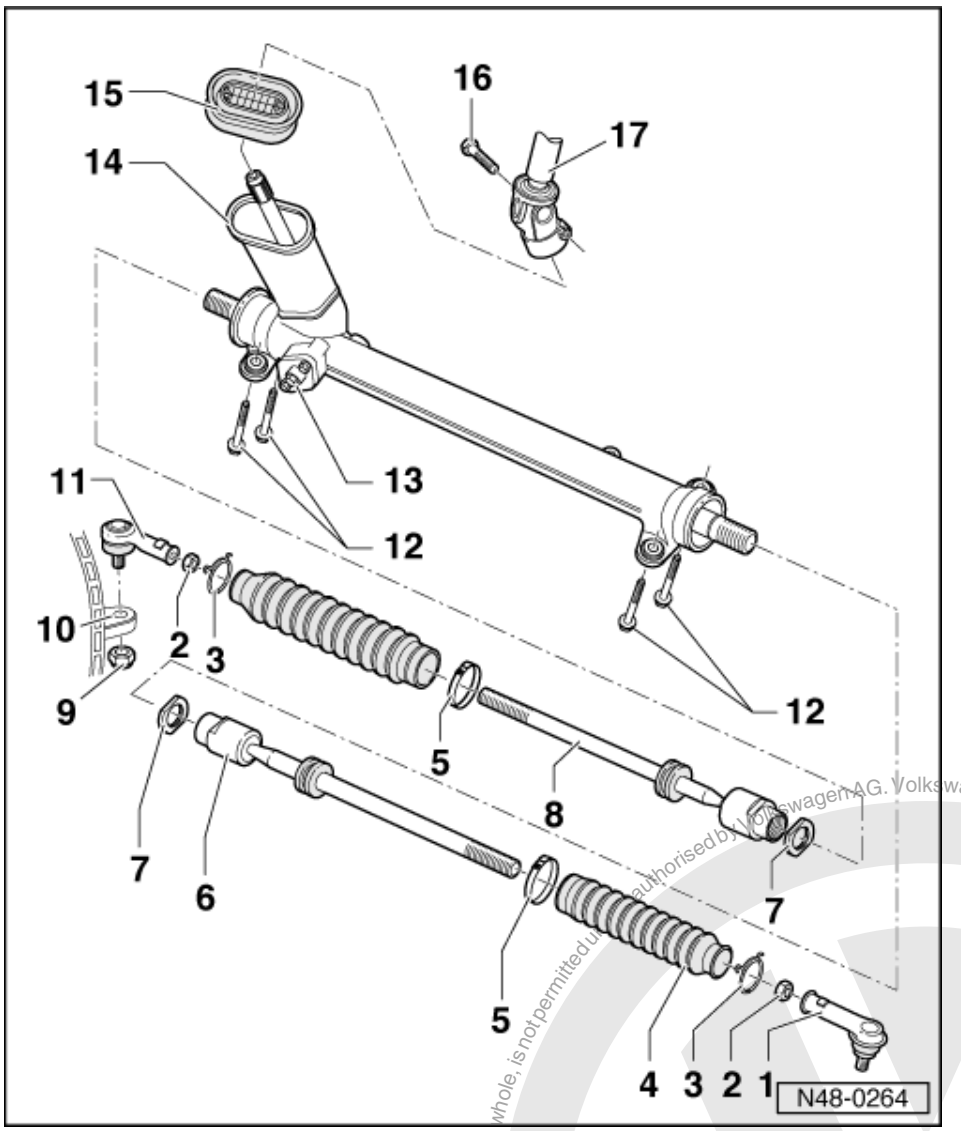

3 Tensioning ring

Installation position:
Eyes point upwards

4 Bellows

- Can be replaced with steering box installed
- Must not be twisted after adjusting track

5 Hose clip

- Renew - open with pliers
- Tensioning => Page 165

6 Right-hand track rod

- Adjustable
- Remove steering box to renew
- Screwing track rod onto rack => Page 164
- Replacement parts are delivered preset
- Adjusting track => Page 114

7 Lock nut

- 50 Nm

Protected by copyright. Copying for private or commercial purposes, in part or in whole, is not permitted unless authorised by Volkswagen AG. Volkswagen AG does not guarantee or accept any liability with respect to the correctness of information in this document. Copyright by Volkswagen AG.
Satelettronica

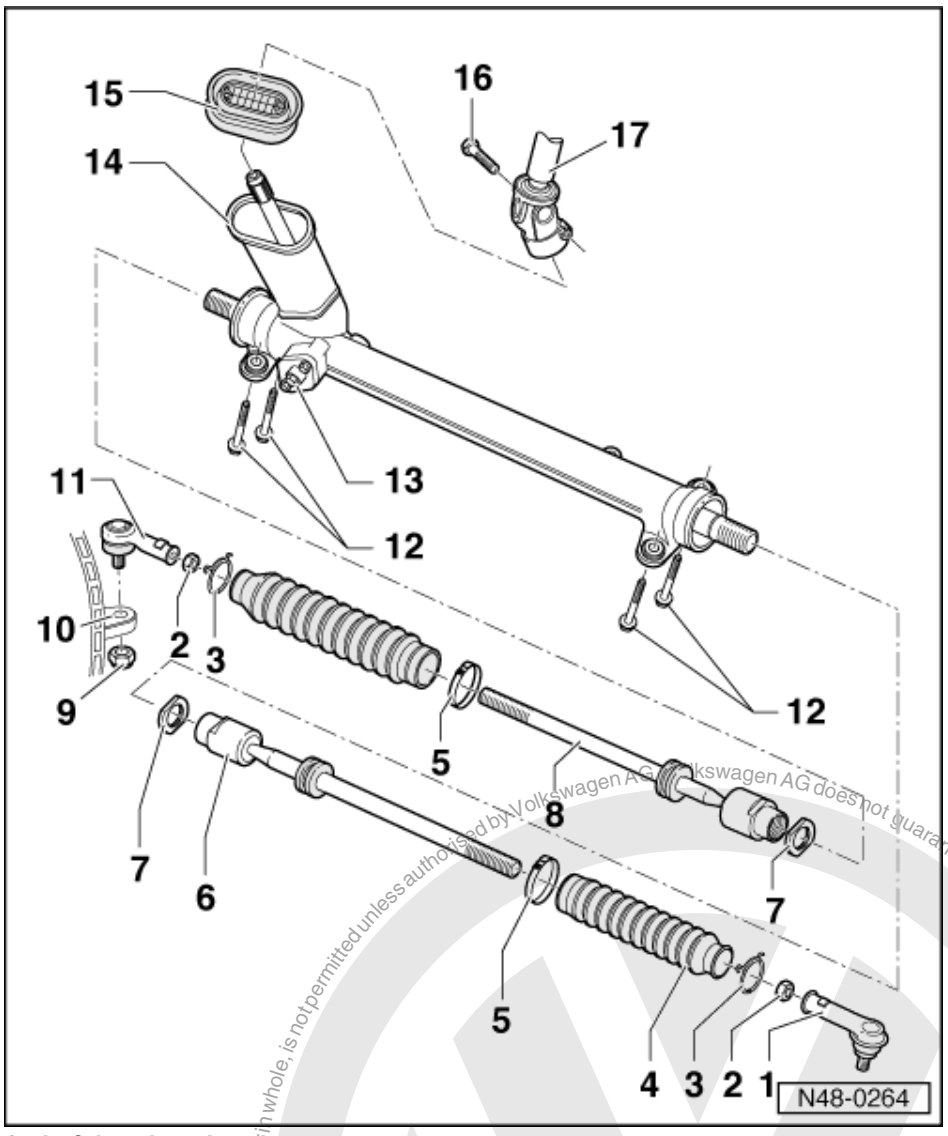

8 Left-hand track rod
- Remove steering box to renew
- Screwing onto rack => Page 164
- Replacement parts are delivered preset
- Checking adjusting length => Page 164

9 Self-locking hexagon nut, 30 Nm

10 Steering arm

11 Left-hand track rod ball joint
- Checking: 163
- Pressing off steering arm => Page 157

12 Hexagon bolt, 30 Nm

13 Adjustment bolt
- Adjusting =>Page 165

Protected by copyright. Copying for private or commercial purposes, in whole, is not permitted unless authorised by Volkswagen AG. Volkswagen AG does not guarantee or accept any liability with respect to the correctness of information in this document. Copyright by Volkswagen AG.
satelettronica

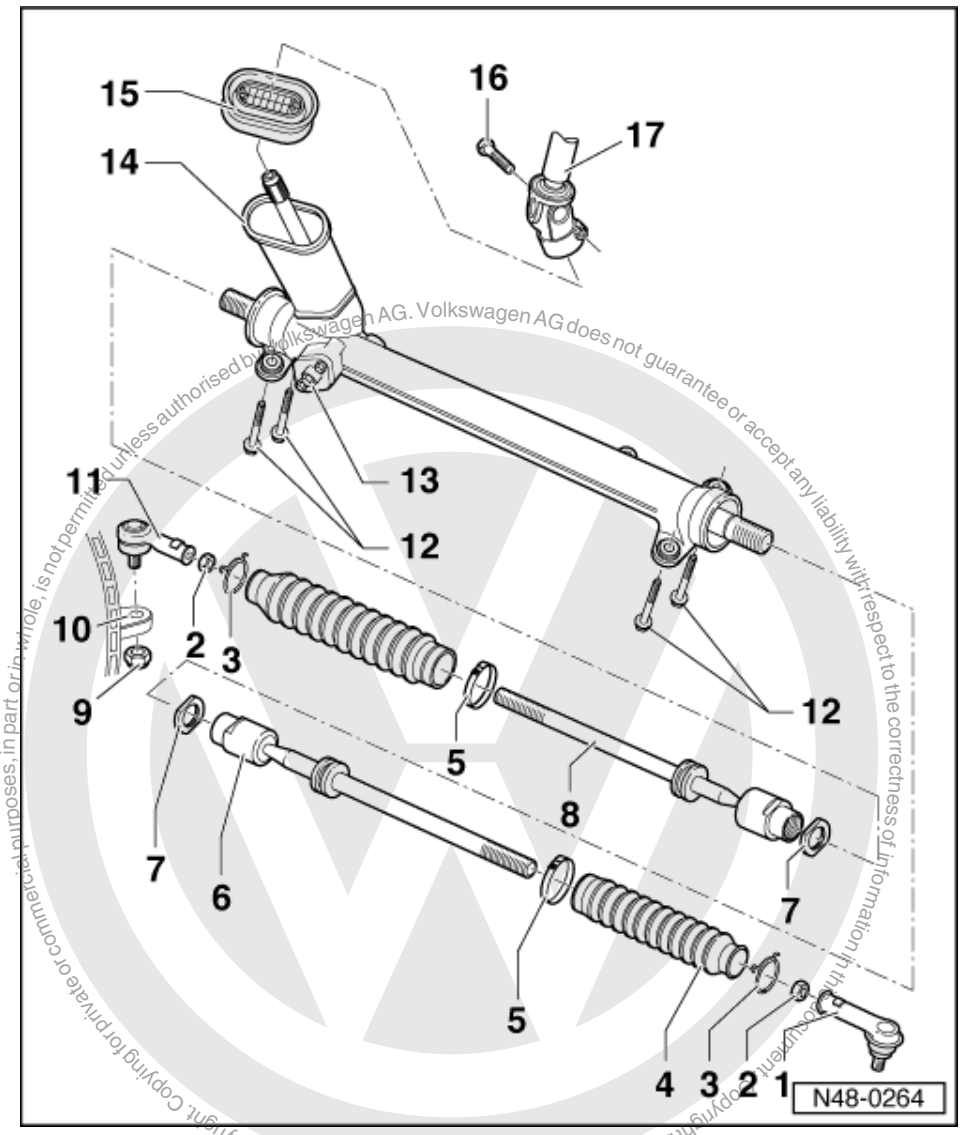

14 Steering box
- Removing and installing
  => Page 155
- Screwing track rod onto rack
  => Page 164

15 Gasket
- "TOP"points upwards

16 Hexagon bolt, 30 Nm

17 Steering column universal joint

2.4 - Checking play, security and boots on tie rod ends

- With vehicle raised (wheels hanging free), check play by moving track rods and wheels. Play: Zero play
- Check mountings.
- Check boots are not damaged and are seated correctly.

satelettronica

2.5 - Checking left-hand track rod length and if necessary adjusting

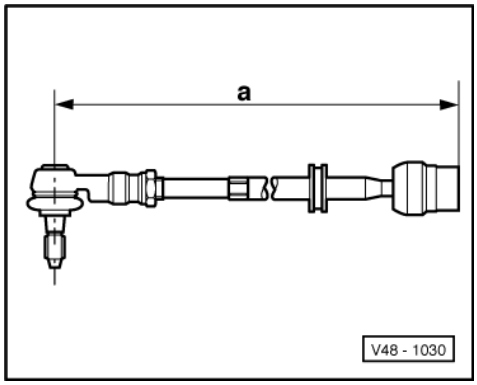

- -> Check dimension "a" on left-hand track rod and if necessary adjust.

Vehicles ‣09.99

Dimension "a" = 364 ± 1 mm

Vehicles 10.99 ‣

Dimension "a" = 374 ± 1 mm

- Screw on track rod and lock (50 Nm).

Notes:

- Only adjust track on right-hand track rod.
- After adjusting total track, check wheel lock => Page 116 .
- If the track rod ball joint is to be removed from the left-hand track rod, dimension "a" must be reset when refitting. Also before installing new left-hand track rod check dimension "a" and if necessary adjust

2.6 - Assembling track rod

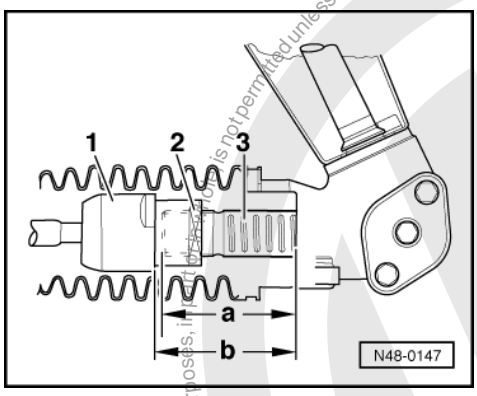

- -> First position rack in steering box so that the protrusion on left and right is identical (dimension -a-) = 67 mm. Measured from the housing shoulder to the face of the rack.
- Screw lock nuts up to end on rack. Screw track rods on until dimension -b- 69.5 mm is attained.

Measure from housing shoulder to inner joint shoulder.

1 - Inner joint
2 - Lock nut
3 - Rack

Protected by copyright. Copying for private or commercial purposes, in part or in whole, is not permitted unless authorised by Volkswagen AG. Volkswagen AG does not guarantee or accept any liability with respect to the correctness of information in this document. Copyright by Volkswagen AG.
satelettronica

Installing bellows

- Check bellows for wear (cuts, cracks) and ensure sealing surfaces are clean.

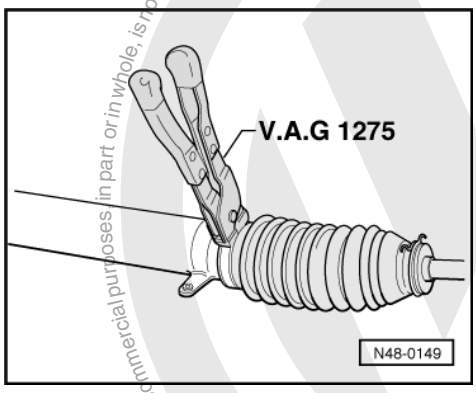

- Install bellows, but first turn the track rod so that the track rod ball joint shank is in the installation position.

Note:

Only use genuine clamp type clips.

- -> Tension clamp-type clips with pliers V.A.G 1275.

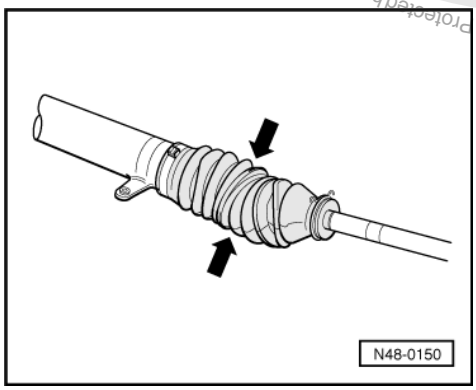

Note:

-> The bellows must on no account be installed twisted (negative example).

2.7 - Adjusting steering box

Note:

Two mechanics are required when adjusting. Adjust with engine switched off.

Protected by copyright. Copying for private or commercial purposes, in part or in whole, is not permitted unless authorised by Volkswagen AG. Volkswagen AG does not guarantee or accept any liability with respect to the correctness of information in this document. Copyright by Volkswagen AG.
satelettronica

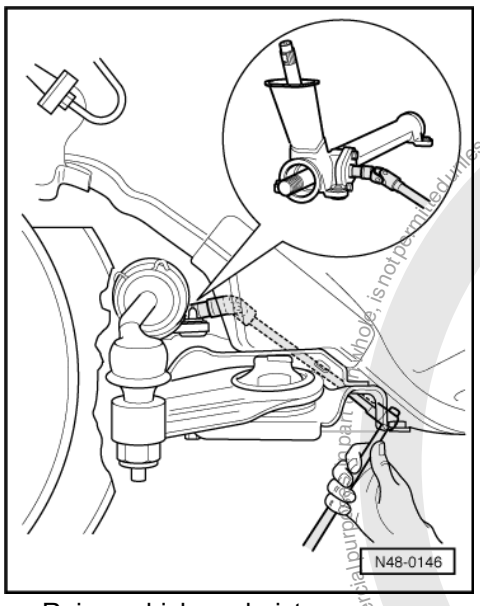

- Raise vehicle on hoist.
- Wheels in straight-ahead position.
- By turning the steering wheel to and fro (about 30°from centre axis) a knocking noise will be heard if there is excessive play.
- -> The second mechanic carefully screws the adjustment screw into the cover until the knocking noise can no longer be heard inside the vehicle.
- Complete a road test ensuring that when manoeuvring or negotiating corners the steering self-centres without sticking.

Illustration shows tool with 3/8'drive

Protected by copyright. Copyright by Volkswagen AG.
Copyright by Volkswagen AG. Volkswagen AG does not guarantee or accept any liability with respect to the correctness of information in this document. This document, in whole or in part, is not permitted unless authorised by Volkswagen AG.
satelettronica

3 - Servicing power assisted steering

3.1 - Servicing power assisted steering

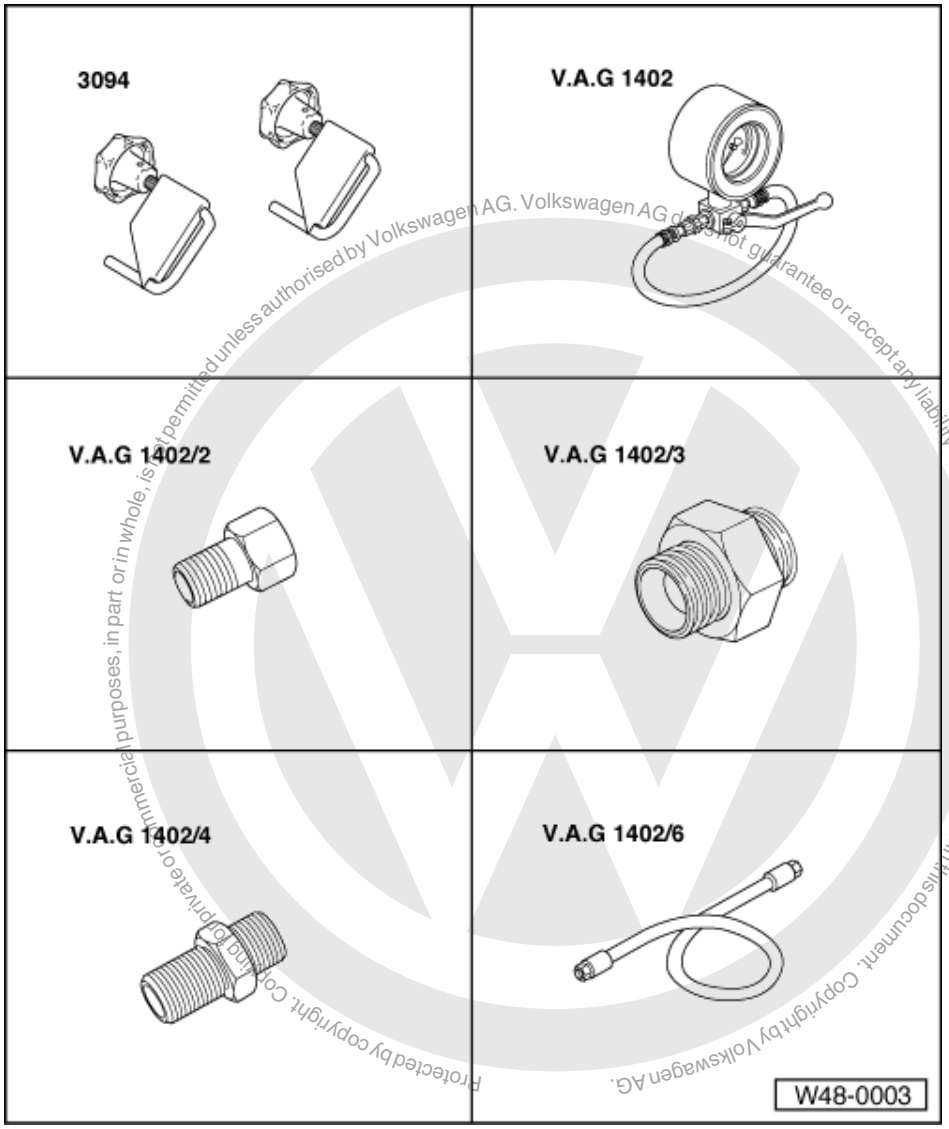

Protected by copyright. Copying for private or commercial purposes, in part or in whole, is not permitted unless authorised by Volkswagen AG. Volkswagen AG does not guarantee or accept any liability with respect to the correctness of information in this document. Copyright by Volkswagen AG.

satelettronica

Special tools and workshop equipment required

- 3094 Hose clamps
- V.A.G 1402 Power steering test unit
- V.A.G 1402/2 Adapter
- V.A.G 1402/3 Adapter
- V.A.G 1402/4 Adapter
- V.A.G 1402/6 Hose from adapter set
- 3411 Guide rods

3.2 - Checking pump delivery pressure

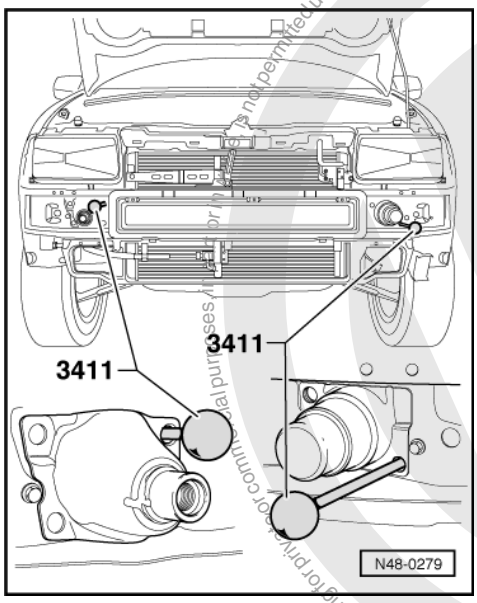

Pump faults

=> Fault finding No. 10 Running gear

Vehicles with Diesel engine

On these vehicles the lock carrier must be pulled forwards.

- Remove front bumper
- Unscrew lock carrier screws.
- -> Insert tool 3411.
- Pull lock carrier forwards.

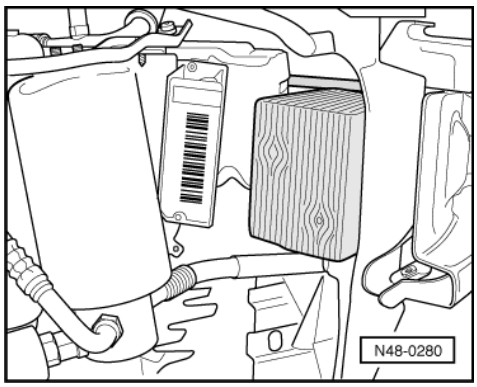

- -> Support the lock carrier e.g. with a wooden block.

Vehicles with Diesel and petrol engines

The continued work sequence is valid for all engines

- Clamp supply line with hose clamp 3094.

Protected by copyright. Copying for private or commercial purposes, in part or in whole, is not permitted unless authorised by Volkswagen AG. Volkswagen AG does not guarantee or accept any liability with respect to the correctness of information in this document. Copyright by Volkswagen AG.
satelettronica

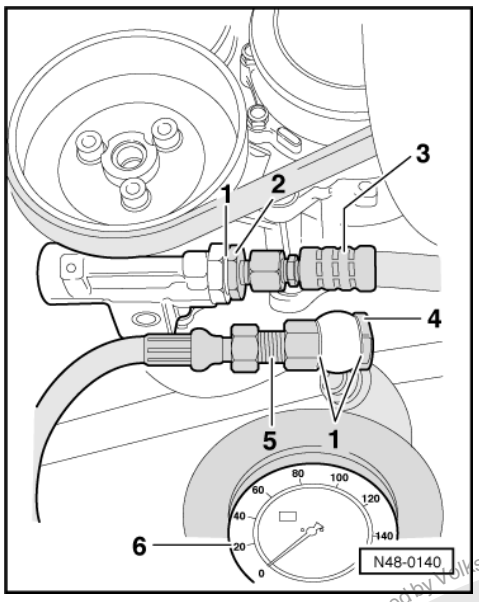

- Disconnect pump pressure pipe.
- -> Install adapter and test equipment. Cut-off valve on gauge open.
- Remove hose clamp 3094 from supply line.
- Start engine and if necessary add fluid to reservoir.

1 - Sealing ring (aluminium)
2 - V.A.G 1402/3
3 - Hose from adapter kit 1402/6
4 - Banjo bolt
5 - V.A.G 1402/2
6 - V.A.G 1402

Test prerequisites:

- V-belt/V-belt tension OK.
- System not leaking.
- Hoses/pipes are not kinked or restricted.

- With engine running at idling speed. Close cut-off valve (not longer than 5 seconds) and read off pressure.

Specifications

Petrol engines: 68...76 bar
Diesel engines: 85...95 bar

Vehicles with a petrol engine, which were built before 07.95, have the same delivery pressure as vehicles with Diesel engine

Notes:

- If the reading is higher or lower than specified renew pump:
- Removing and installing P.A.S. vane pump =>Page 189 .
- If reservoir fluid level is low then check steering system for leaks.
- For leaks at the pinion first check the pipes/pipe connections for leaks and if necessary tighten and wipe dry.
- If the pinion seal or the rack seals in steering box housing are leaking then renew steering box.
- To check the rack seals loosen the hose clip on the bellows and push bellows to one side.

Protected by copyright. Copying for private or commercial purposes, in part or in whole, is not permitted unless authorised by Volkswagen AG. Volkswagen AG does not guarantee or accept any liability with respect to the correctness of information in this document. Copyright by Volkswagen AG.
satelettronica

3.3 - Removing and installing power assisted steering box

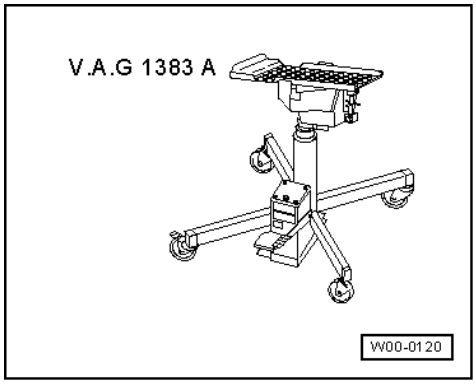

Special tools and workshop equipment required

- V.A.G 1383 A Gearbox jack

Instructions when working on the power assisted steering box

- Absolute cleanliness is required when working on the power assisted steering.
- Thoroughly clean connections and immediate vicinity before loosening.
- Place parts on a clean surface and cover if not re-installing immediately.
- Do not use fluffy cloth.
- Only unpack parts immediately prior to fitting.
- Only use genuine packed parts.

Removing

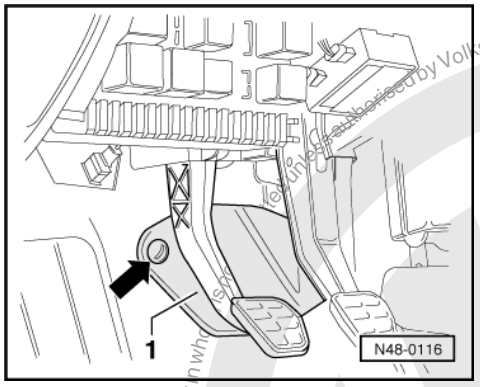

- -> Removing cover -1-.

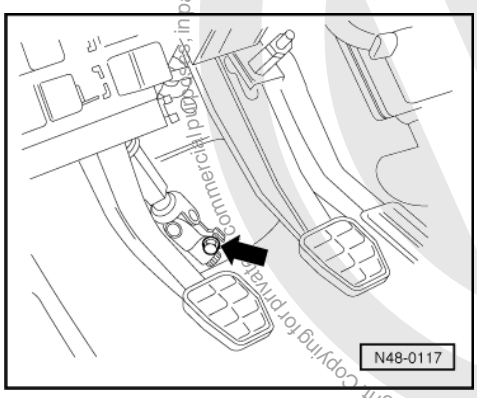

- -> Remove joint bolt.

satelettronica
Protected by copyright. Copying for private or commercial purposes, in part or in whole, is not permitted unless authorised by Volkswagen AG. Volkswagen AG does not guarantee or accept any liability with respect to the correctness of information in this document. Copyright by Volkswagen AG.

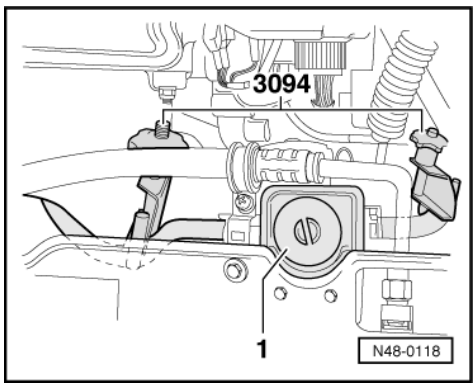

- -> Clamp hose from reservoir with hose clamp 3094.
- Remove front wheels.

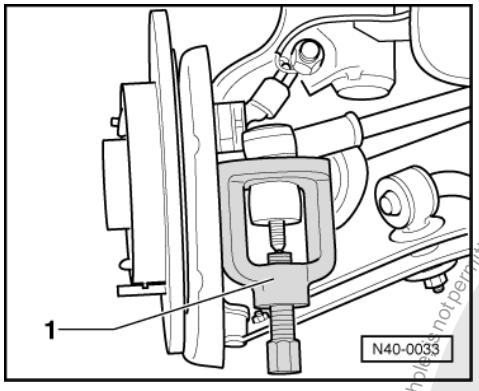

- -> Press track rod end off steering arm.

  1 - Ball joint splitter (commercial type) e.g. Kukko No. 128/2

Vehicles ▸09.99

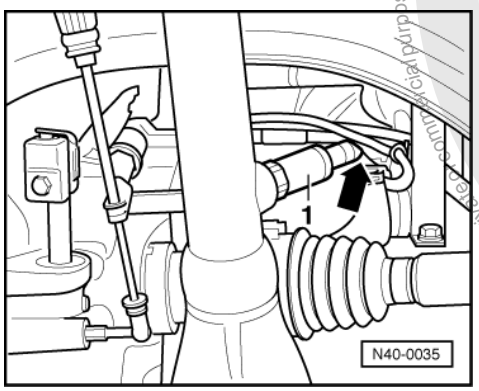

- -> Unclip Lambda probe -1- wiring (arrow) at retainer.

Protected by copyright. Copying for private or commercial purposes, in part or in whole is not permitted unless authorised by Volkswagen AG. Volkswagen AG does not guarantee or accept any liability with respect to the correctness of information in this document. Copyright by Volkswagen AG.
satelettronica

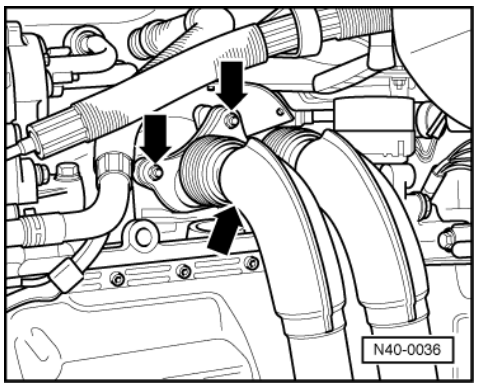

- -> Unbolt exhaust pipe.

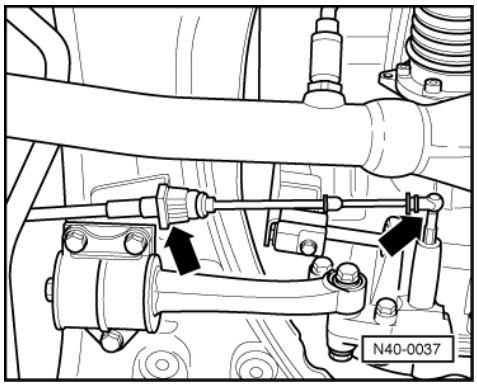

- -> Unclip cable (arrows).

Vehicles 10.99 ▸

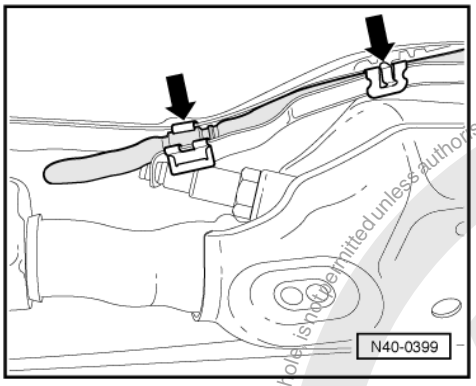

- -> Unclip Lambda probe cable.

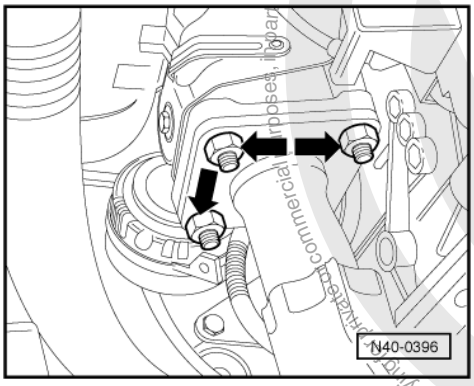

Protected by copyright. Copyright by Volkswagen AG.
Copying for private or commercial purposes, in part or in whole, is not permitted unless authorised by Volkswagen AG. Volkswagen AG does not guarantee or accept any liability with respect to the correctness of information in this document.
satelettronica

- -> Unbolt exhaust pipe.

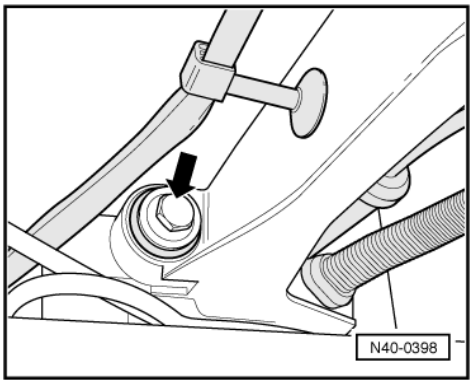

- -> Remove bracket for gear change cables from assembly carrier (arrow).

  Only fitted on vehicles with cable operated gear change.

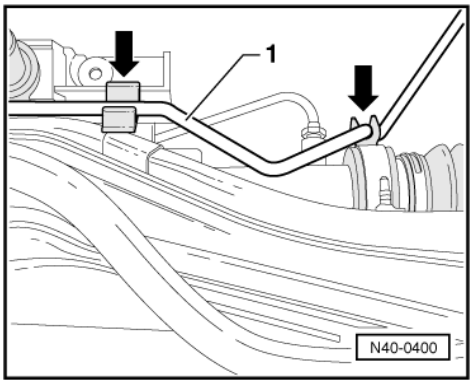

- -> Unclip return supply hose.

Continued for all vehicles

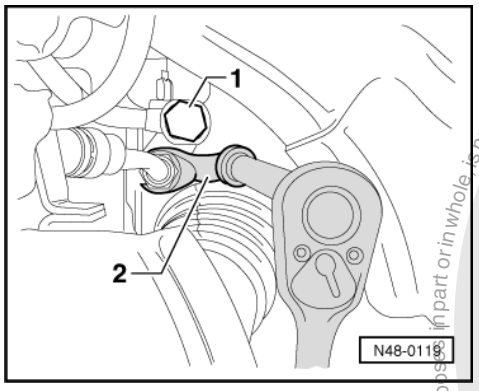

- -> Disconnect hoses from steering box and seal with plastic bag and adhesive tape.
- Seal power assisted steering box threaded holes with plastic sealing plugs.

  1 - Banjo bolt (19 mm AF)
  2 - Socket e.g. Hazet 4550

- Unclip hose retainer from hoses/lines.

- Remove power-assisted steering box bolts.

satelettronica
Protected by copyright. Copying for private or commercial purposes, in part or in whole, is not permitted unless authorised by Volkswagen AG. Volkswagen AG does not guarantee or accept any liability with respect to the correctness of information in this document. Copyright by Volkswagen AG.

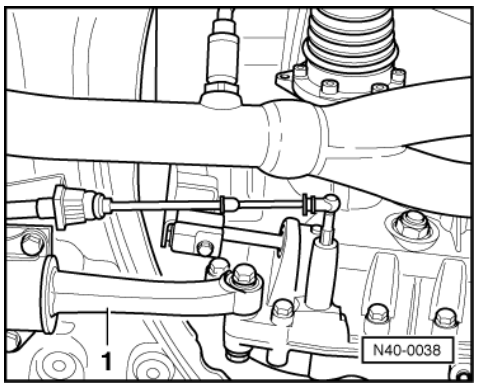

- -> Detach pendulum support -1- at gearbox.
- Place gearbox jack V.A.G 1383 A under sub-frame.
- Remove bolts for sub-frame.
- Lower sub-frame using gearbox jack V.A.G 1383 A.
- Pull power-assisted steering box off steering column universal joint shaft and take out to side.

When removing the steering box ensure that the pinion splines do not stick or cant in the steering column universal joint shaft.

Installing

Notes:

- Use new sealing rings for hose/line connections.
- Coat steering box seals with lubricant, e.g. soft soap, before installing steering box.
- After fitting the steering box to the universal joint shaft ensure that the seal lies against the assembly plate without kinking and that the opening to the footwell is correctly sealed.
  Noises may be created and/or water may ingress.
- Ensure sealing surfaces are clean.

Install in reverse order

A 2nd mechanic may be required when fitting the pinion to the universal joint shaft.

Before fitting bolts for the sub-frame, position steering box on sub-frame and insert bolts for steering box.

- Check front wheel alignment and position of steering wheel.

3.4 - Assembly overview power assisted steering box

It is not intended that repair work be carried out on the power assisted steering box. If complaints are received determine cause with the help of pressure tests, leakage test and fault finding programme running gear No. 10. If a fault exists renew power assisted steering box.

Notes:

- Renew self-locking nuts and bolts. Welding and straightening work on steering components is not permitted.
- To grease the rack only use steering box grease Part No. AOF 063 000 04.
- Renew self locking nuts and bolts.
- Type of oil: Hydraulic oil Part No. G 002 000
- Oil system capacity: 0.7 ... 0.9 ltr.
- Supply and pressure pipe routing
  => Assembly overview: Vane pump, reservoir and hydraulic pipes Page 185 .

Protected by copyright. Copying for private or commercial purposes, in part or in whole, is not permitted unless authorised by Volkswagen AG. Volkswagen AG does not guarantee or accept any liability with respect to the correctness of information in this document. Copyright by Volkswagen AG.
satelettronica

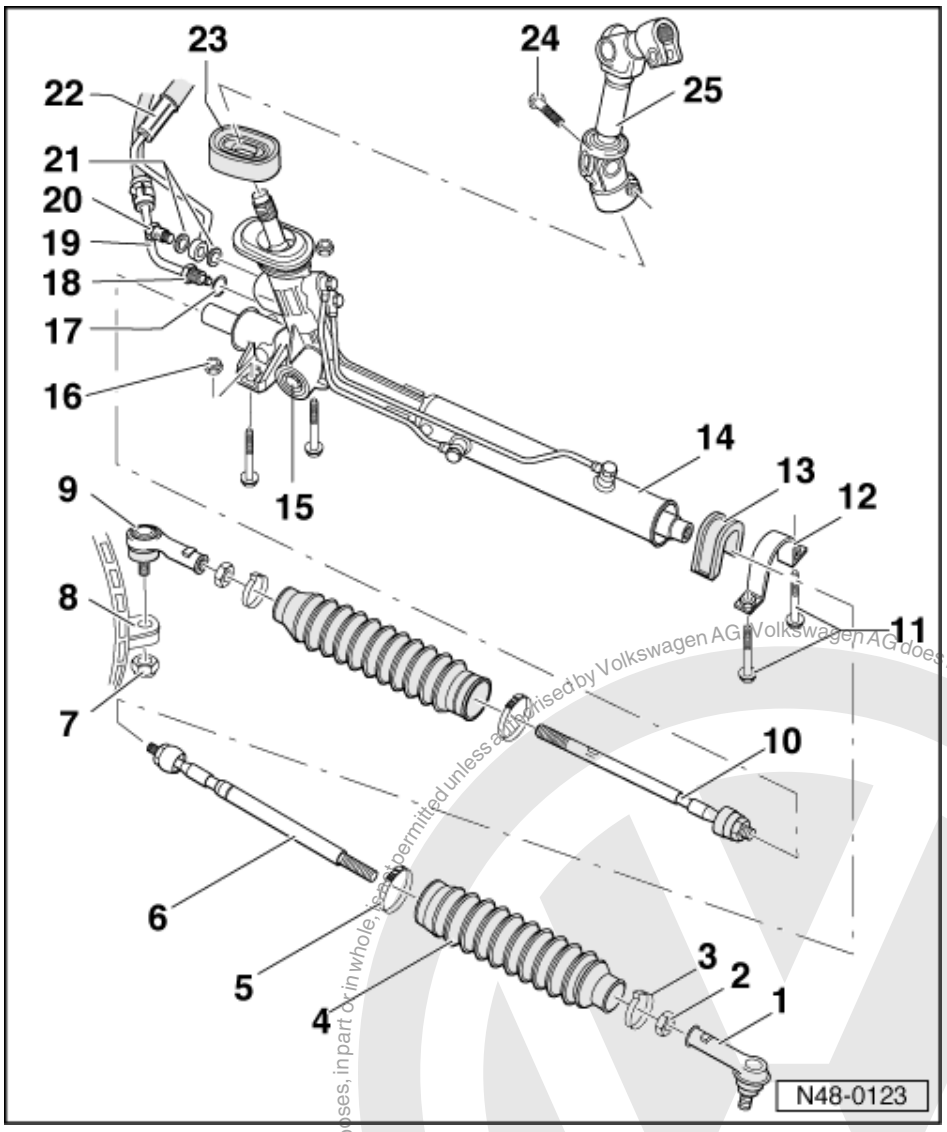

1 Right-hand track rod ball joint
- Checking: =>Page 163
- Pressing off steering arm => Page 171
  Modification:
  Modified track rod ball joints => Page 181

2 50 Nm

3 Hose clip
- Renew - open with pliers
- Tensioning => Page 184

4 Bellows
- Must not be twisted after adjusting track
- Remove steering box to replace

5 Hose clip
- Renew - open with pliers
- Tensioning => Page 184

Protected by copyright. Copying for private or commercial purposes, in part or in whole, is not permitted unless authorised by Volkswagen AG. Volkswagen AG does not guarantee or accept any liability with respect to the correctness of information in this document. Copyright by Volkswagen AG.
satelettronica

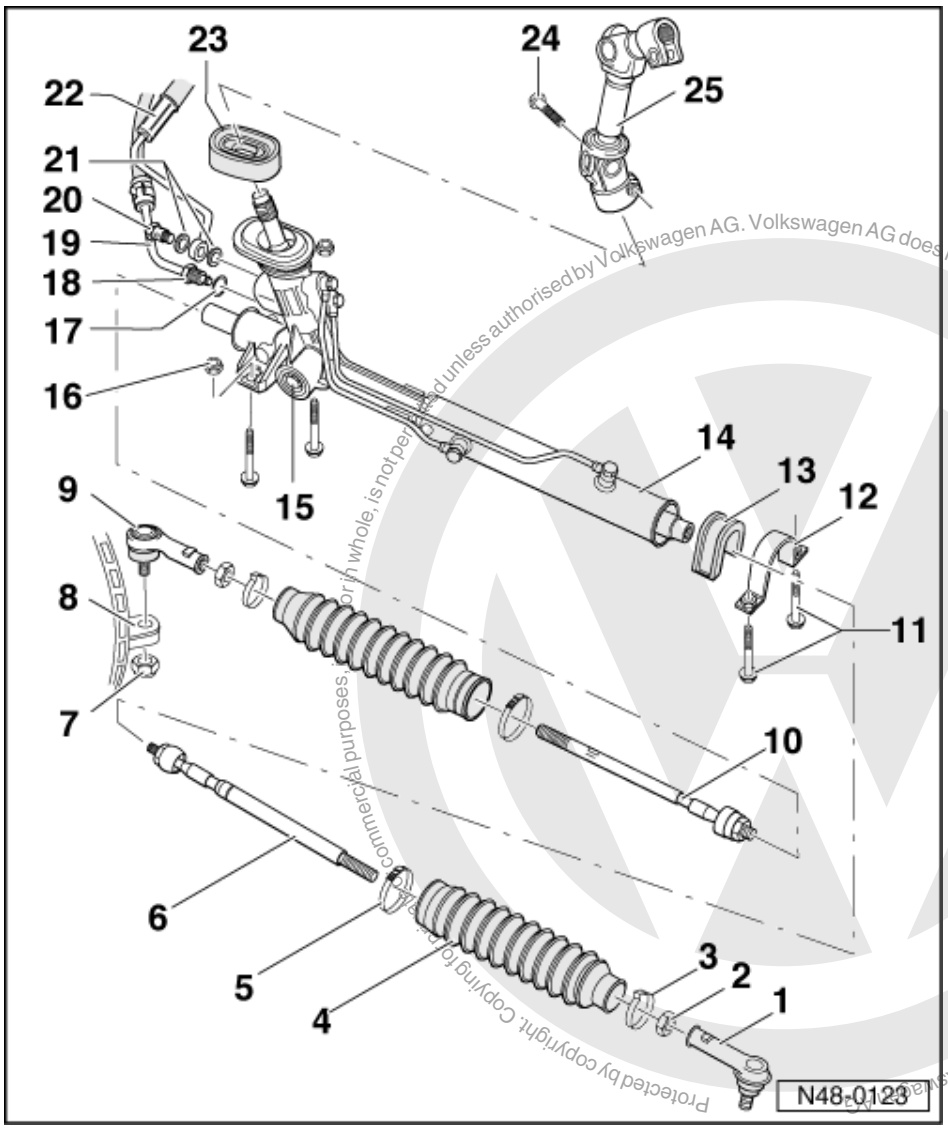

Protected by copyright. Copying for commercial purposes, in whole or in whole, is not permitted unless authorised by Volkswagen AG. Volkswagen AG does not guarantee or accept any liability with respect to the correctness of information in this document. Copyright by Volkswagen AG.

6 Right-hand track rod
- 80 Nm
- Removing and installing
  => Page 180
- Replacement parts are supplied preset
- Vehicle alignment => Page 114
  Modification:
  Modified track rods => Page 182

7 Self-locking hexagon nut, 35 Nm

8 Steering arm

9 Left-hand track rod ball joint
- Checking: => Page 163
- Pressing off steering arm => Page 171
  Modification:
  Modified track rod ball joints => Page 181

satelettronica

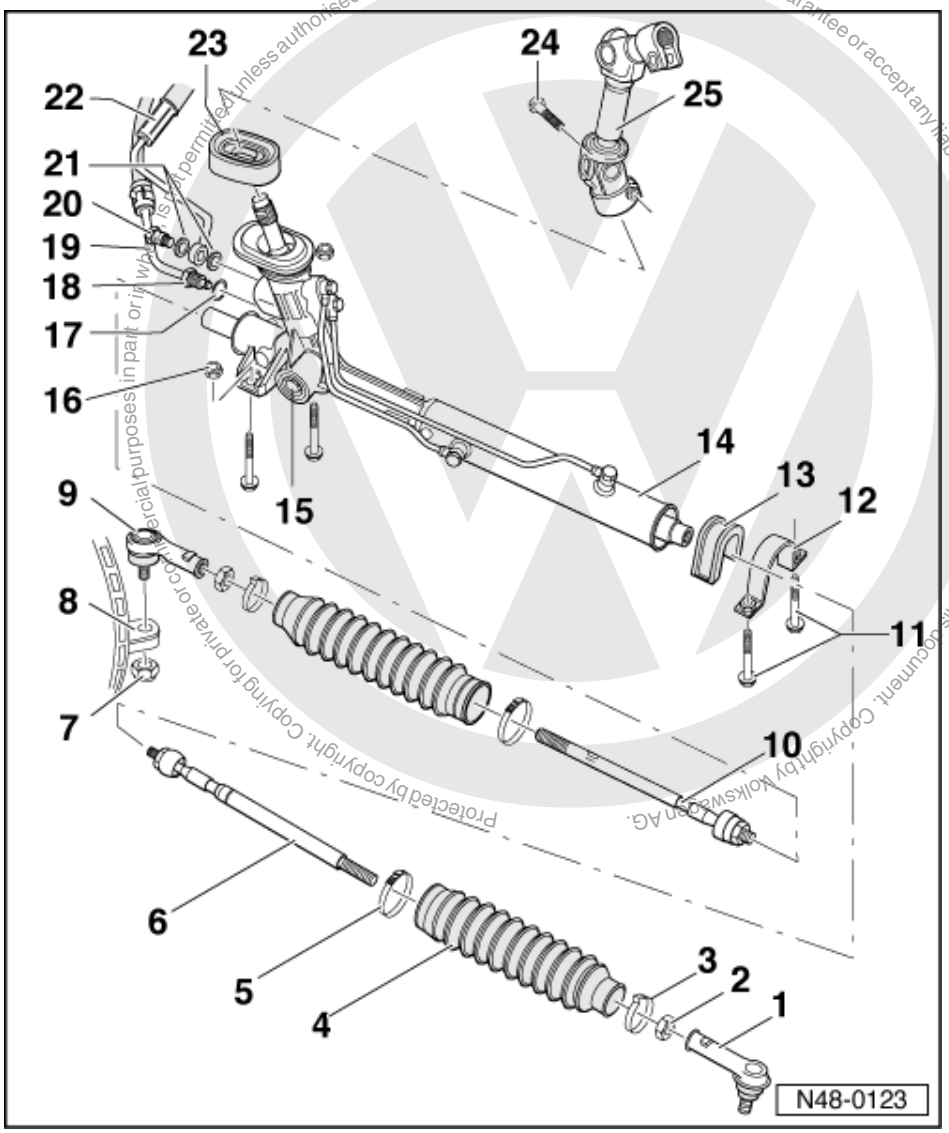

Protected by copyright. Copying for private or commercial purposes, in part or in whole, is not permitted unless authorised by Volkswagen AG. Volkswagen AG does not guarantee or accept any liability with respect to the correctness of information in this document. Copyright by Volkswagen AG.

10 Left-hand track rod

- 80 Nm
- Removing and installing
  => Page 180
- Replacement parts are supplied preset
- Checking length and adjusting
  => Page 183
  Modification:
  Modified track rods => Page 182

11 Hexagon bolt, 30 Nm

12 Clamp with nuts

- Replace if threads are damaged

13 Rubber mounting

14 Steering box

- Removing and installing
  => Page 170
- Checking steering moment

=> Fault finding, running gear No. 10

15 Adjustment bolt

satelettronica

- Adjusting should not be necessary

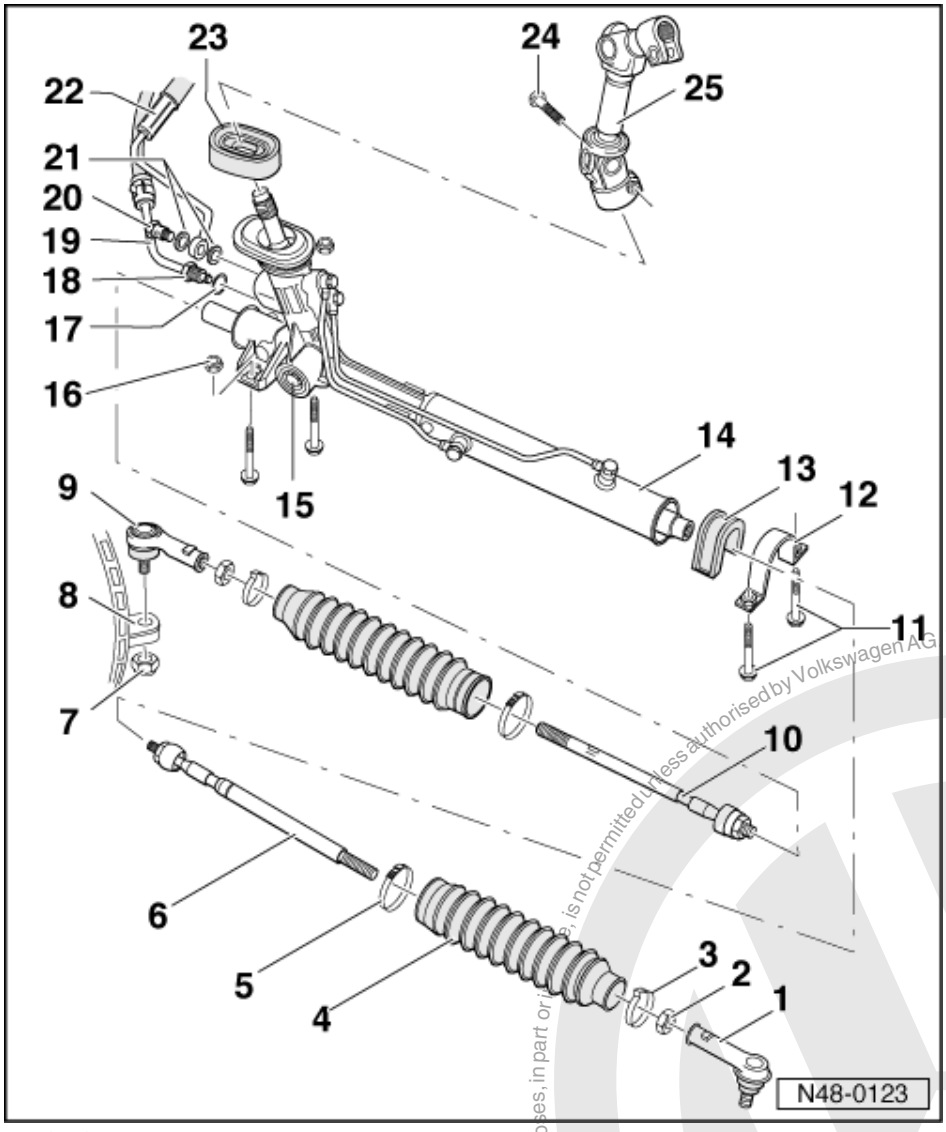

16 Self-locking hexagon nut
17 Sealing ring
18 Union nut, 20 Nm
19 Return hose
20 Banjo bolt, 30 Nm
21 Sealing ring
22 Pressure hose
23 Gasket
24 Hexagon bolt, 30 Nm
25 Steering column universal joint

Protected by copyright. Copying for private or commercial purposes, in part or in whole, is not permitted unless authorised by Volkswagen AG. Volkswagen AG does not guarantee or accept any liability with respect to the correctness of information in this document. Copyright by Volkswagen AG.
satelettronica

3.5 - Assembly overview hydraulic pipes, power assisted steering box; RHD vehicles

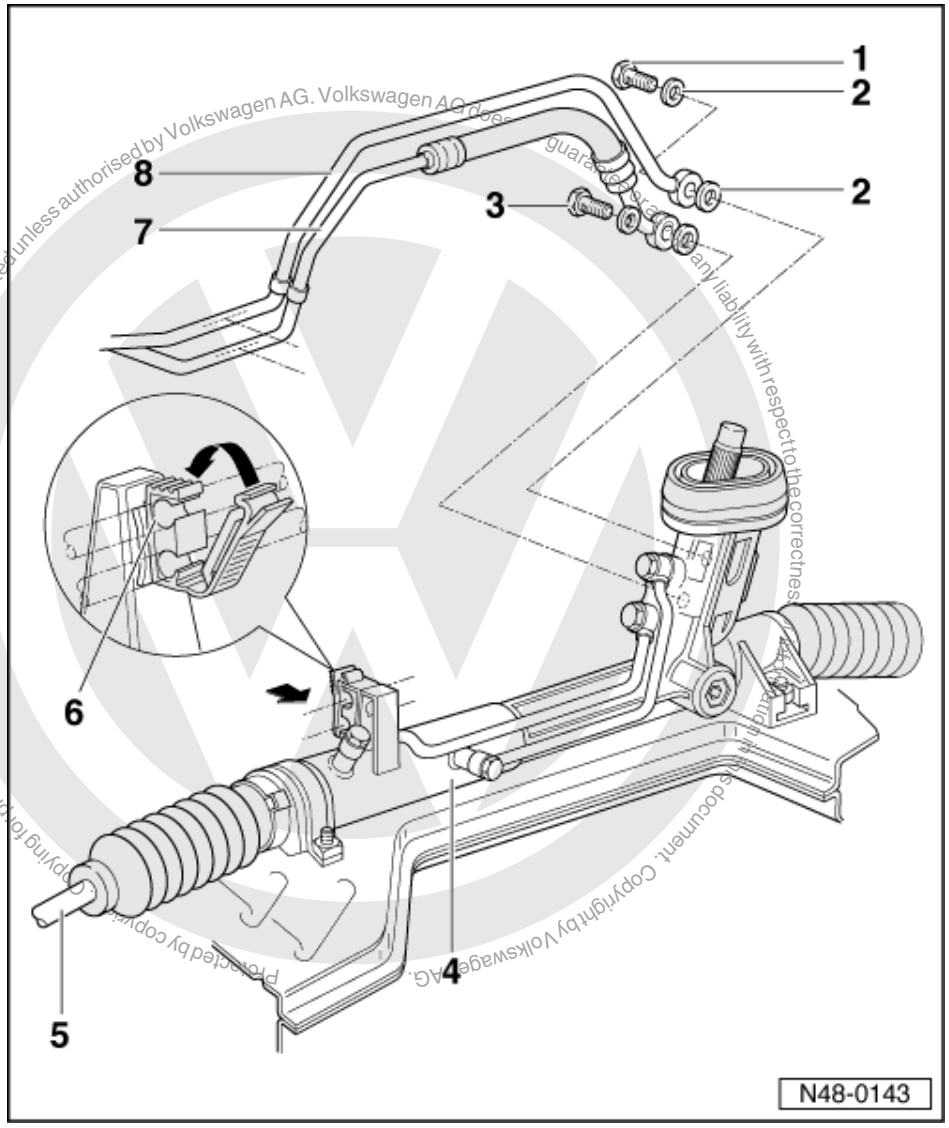

Protected by copyright. Copyright by Volkswagen AG. Volkswagen AG does not guarantee or assume any liability with respect to the correctness of information in this document. Copying for private or commercial purposes, in part or in whole, is not permitted unless authorised by Volkswagen AG.

satelettronica

Assembly instructions to remove and install the power steering gearbox => Page 170 .

The removal and installation or the replacement of individual parts is the same as for left-hand drive vehicles => Page 174

1 Banjo bolt, 30 Nm
2 Seals
- Renew

3 Banjo bolt, 30 Nm
4 Power assisted steering box
5 Left-hand track rod
6 Bracket
7 Return pipe
8 Pressure pipe

3.6 - Removing and installing track rod

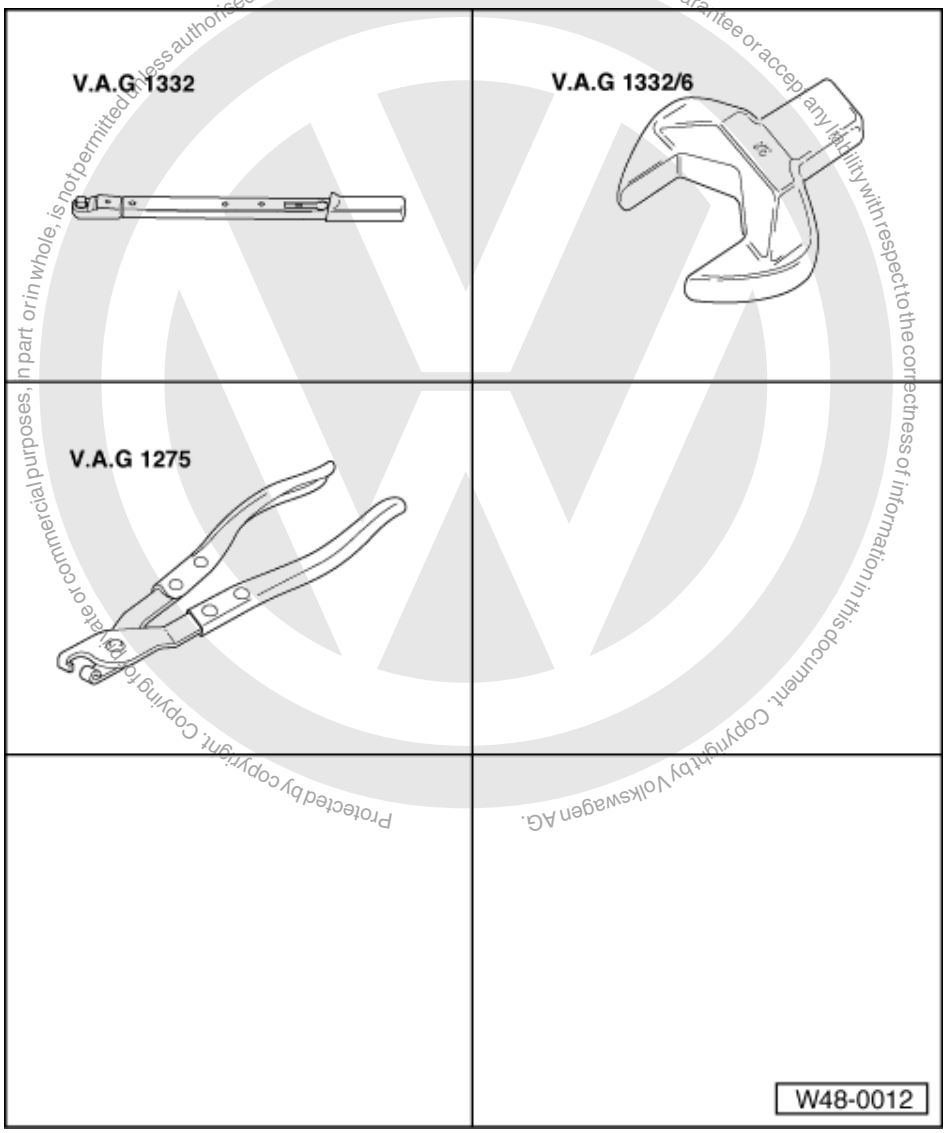

Protected by copyright. Copying for private or commercial purposes, in part or in whole, is not permitted unless authorised by Volkswagen AG. Volkswagen AG does not guarantee or accept any liability with respect to the correctness of information in this document. Copyright by Volkswagen AG.

satelettronica

Special tools and workshop equipment required

- V.A.G 1332 Torque wrench
- V.A.G 1332/6 Open jaw insert, 32 mm AF
- V.A.G 1275 Pliers

Removing

The track rods can only be removed/installed with the steering box removed.

- Seal pipe connections on power assisted steering box if not already done.

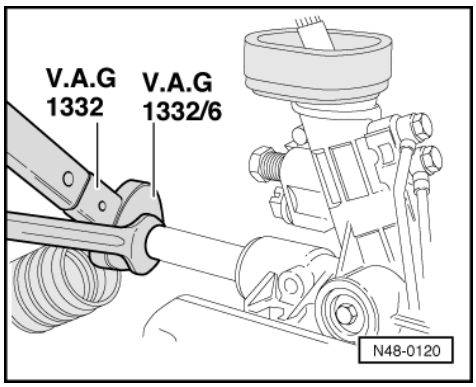

- Clean outside of power assisted steering box in vicinity of the bellows.
- Open hose clips and push bellows back.
- -> Clamp steering box in a vice and unscrew the track rod.

Installing

Install in reverse order.

Tightening torque:

Track rod to P.A.S. box 80 Nm

3.7 - Modified track rod ball joints

The manufacturing process for the track rod ball joints has been optimised. This has resulted in changes to the external shape and length of the internally threaded shaft.

It was then necessary to modify the track rods to match the track rod ball joints, => Page 182 .

Was introduced in the Wolfsburg factory from;

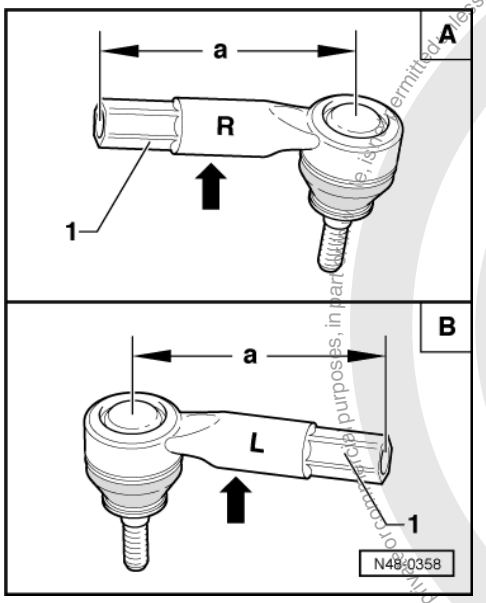

Vehicle identification No. 6N WW 078 257

in the Spanish factory for left-hand drive vehicles from;

Vehicle identification No. 6N WY 156 682;

satelettronica
Protected by copyright. Copyright by Volkswagen AG. Volkswagen AG does not guarantee or accept any liability with respect to the correctness of information in this document. Copyright by Volkswagen AG.

for right-hand drive vehicles from 6N WY 172 199

The modified track rod ball joints can be recognised by the following features.

A - Right-hand track rod ball joint

1 - Hexagon on internally threaded shaft, spanner size 19 mm
Dimension -a-; 94 ± 0.5 mm
Identification "R" for right

B - Left-hand track rod ball joint

1 - Hexagon on internally threaded shaft, spanner size 19 mm
Dimension -a-; 94 ± 0.5 mm
Identification "L" for left

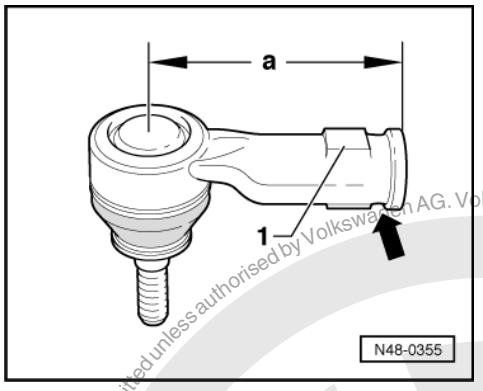

Identifying features for the previous track rod ball joint

1 - Flats for spanner on the shaft, marked with "R" or "L"
spanner size 22 mm
Dimension -a-; 74 - 1 mm
The shaft -arrow- is round

Warning!
This track rod ball joint must not be fitted to a track rod which has a length of-a-

3.8 - Modified track rods

The track rods have been shortened.

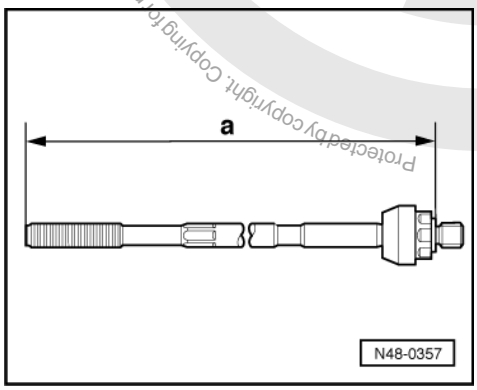

Protected by copyright. Copying for private or commercial purposes, in part or in whole, is not permitted unless authorised by Volkswagen AG. Volkswagen AG does not guarantee or accept any liability with respect to the correctness of information in this document. Copyright by Volkswagen AG.
satelettronica

Was introduced in the Wolfsburg factory from;

Vehicle identification No. 6N WW 078 257

in the Spanish factory for left-hand drive vehicles from;

Vehicle identification No. 6N WY 156 682;
for right-hand drive vehicles from 6N WY 172 199

Track rod dimensions

- Previous track rod; dimension -a- approx. 308 mm
- New track rod; dimension -a- approx. 287 mm

Note:

A mixed installation of previous and new track rods is not permitted!

3.9 - Checking left-hand track rod length and if necessary adjusting

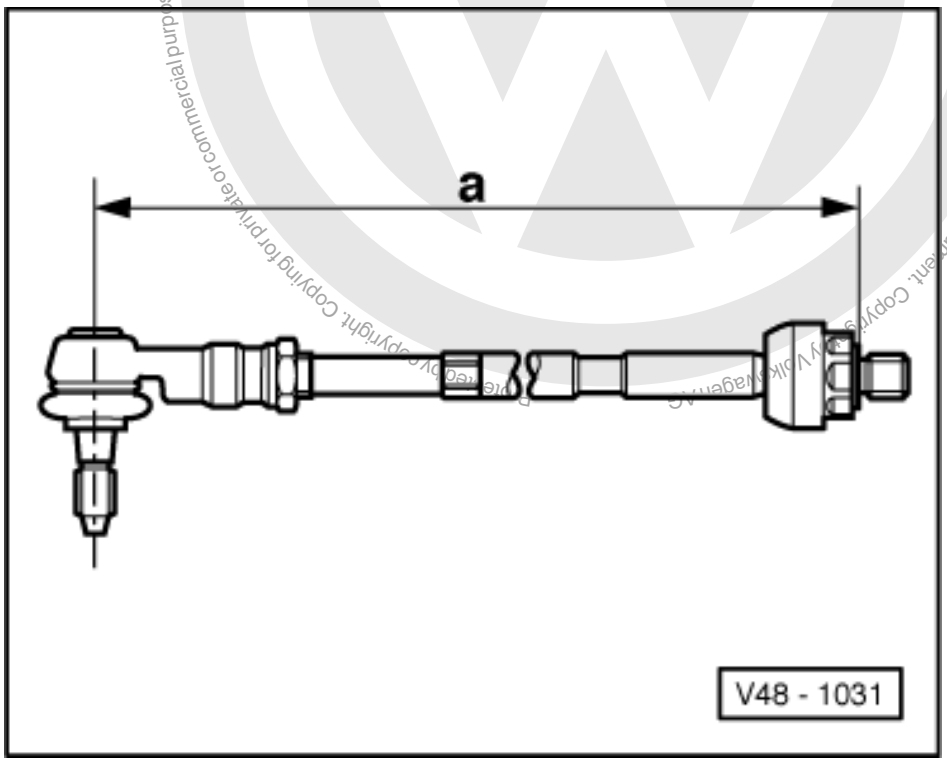

- -> Check dimension "a" on left-hand track rod and if necessary adjust.

Vehicles ‣09.99

Dimension "a" = 350.5 ± 1 mm

Vehicles 10.99 ‣

Dimension "a" = 360.5 ± 1 mm

satelettronica

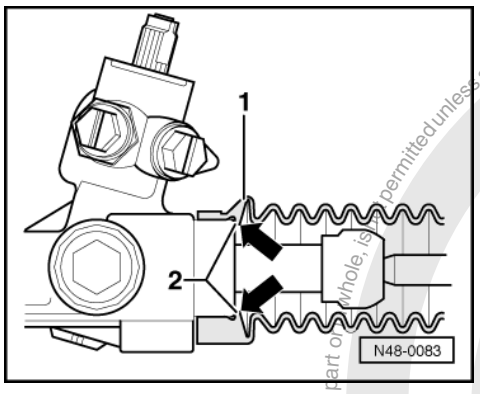

Notes:

- Only adjust track on right-hand track rod.
- After adjusting total track, check wheel lock => Page 116 .
- Before installing new left-hand track rod check dimension "a" and if necessary adjust.

-> Bellows installation position

1 - Bellows
2 - Housing

When installing the bellows ensure that the lip (arrows) lies against the housing

Installing bellows

- Check bellows for wear (cuts, cracks) and ensure sealing surfaces are clean.

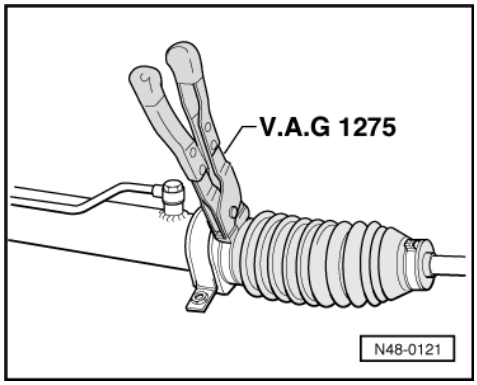

- -> Install bellows, but first turn the track rod so that the track rod ball joint shank is in the installation position.

Note:

- Only use genuine clamp-type clips.

- Tension clamp-type clips with pliers V.A.G 1275.

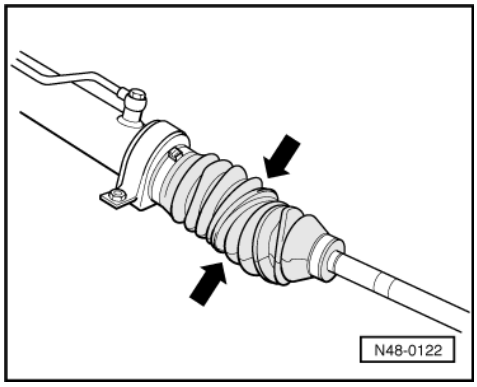

Protected by copyright. Copyright by Volkswagen AG.
Volkswagen AG does not guarantee or accept any liability with respect to the correctness of information in this document. Copyright by Volkswagen AG.
satelettronica

-> The bellows must on no account be installed twisted (negative example).

3.10 - Checking play, security and boots on tie rod ends

- With vehicle raised (wheels hanging free), check play by moving track rods and wheels. Play: Zero play
- Check mountings.
- Check boots are not damaged and are seated correctly.

4 - Assembly overview vane pump, reservoir, hydraulic pipes

4.1 - Assembly overview vane pump, reservoir, hydraulic pipes

Protected by copyright. Copying for private or commercial purposes, in part or in whole, is not permitted unless authorised by Volkswagen AG. Volkswagen AG does not guarantee or accept any liability with respect to the correctness of information in this document. Copyright by Volkswagen AG.

It is not intended that repair work be carried out on the vane pump. If complaints are received determine cause with the help of pressure tests, leakage test and fault finding programme running gear No. 10. If a fault exists renew vane pump.

Notes:

- Pumps supplied as replacement parts are not filled with oil. Therefore it is essential to fill the pump with hydraulic oil Part No. G 002 000 and to rotate it by hand, otherwise the pump may be damaged or noisy during operation.
- Type of oil: hydraulic oil Part No. G 002 000
- Oil system capacity: 0.7 ... 0.9 ltr.

satelettronica

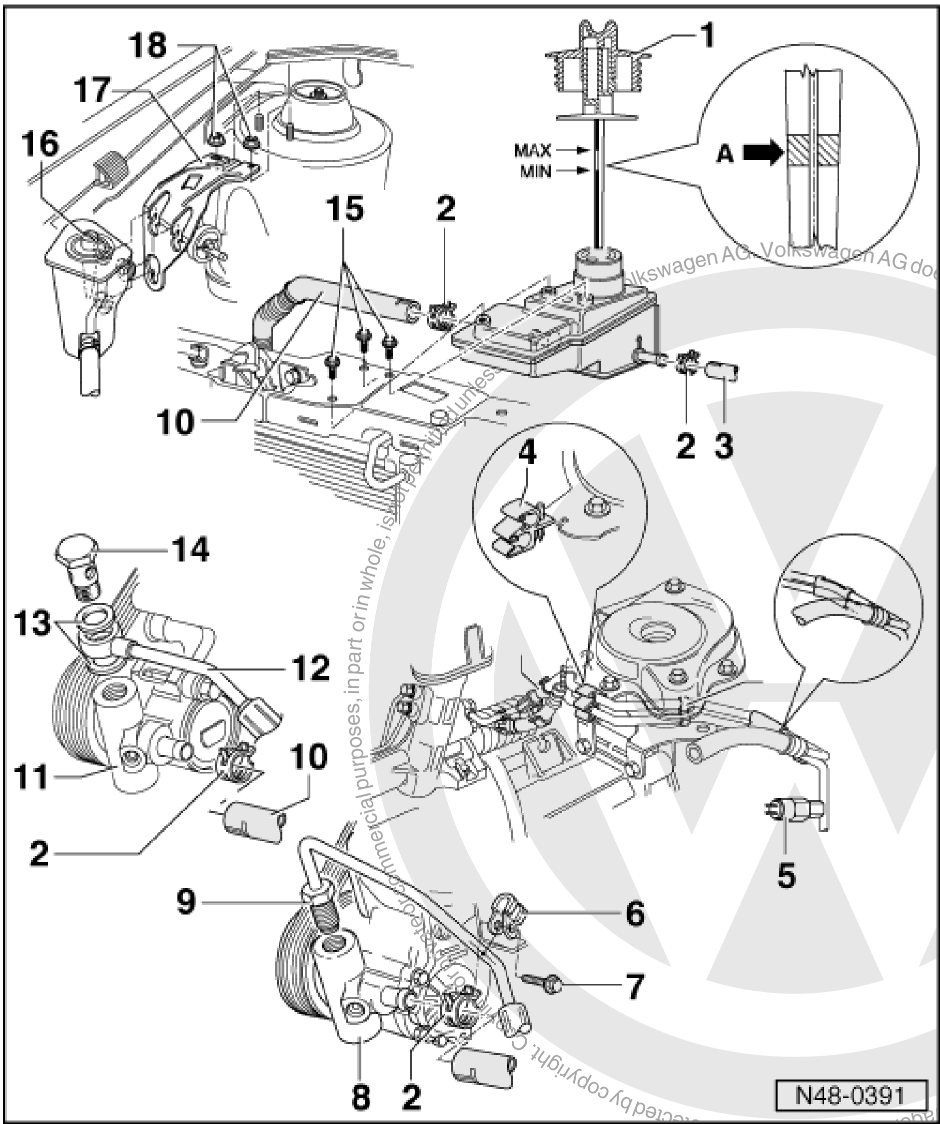

1 **Cap with dip stick**
- Oil level: between min. and max. marks; Engine temperature approx. 50° C
- Arrow A: oil level with engine cold
- With engine cold, oil level must not rise above Min. marking
- Screw cap fully on before checking oil level

2 **Spring-type clamp**

3 **Return hose**
- Coloured marking alines with arrow on reservoir

4 **Retainer**
- On gearbox mounting

5 **Pressure switch**
- 15 Nm

satelettronica

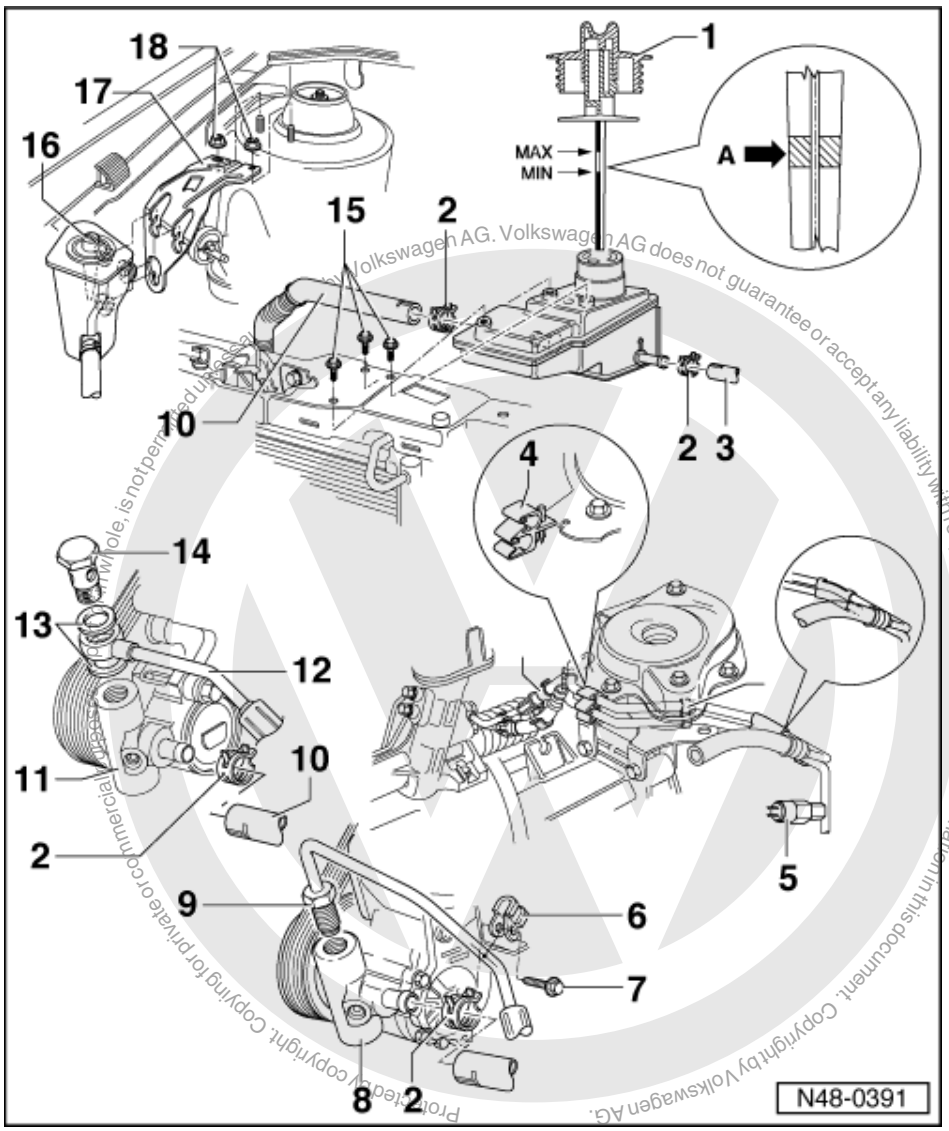

6 Clamp
7 Hexagon bolt, 25 Nm
8 Vane pump
- For vehicles not fitted with air conditioner
- Checking delivery pressure => Page 168
- Before installing fill with oil =>Note Page 185

9 Union nut, 30 Nm
10 Supply hose
- According to version coloured marking aligns with housing joint edge or mark on pump support.

11 Vane pump
- For vehicles fitted with air conditioner
- Checking delivery pressure => Page 168
- Before installing fill with oil =>Note Page 185

satelettronica

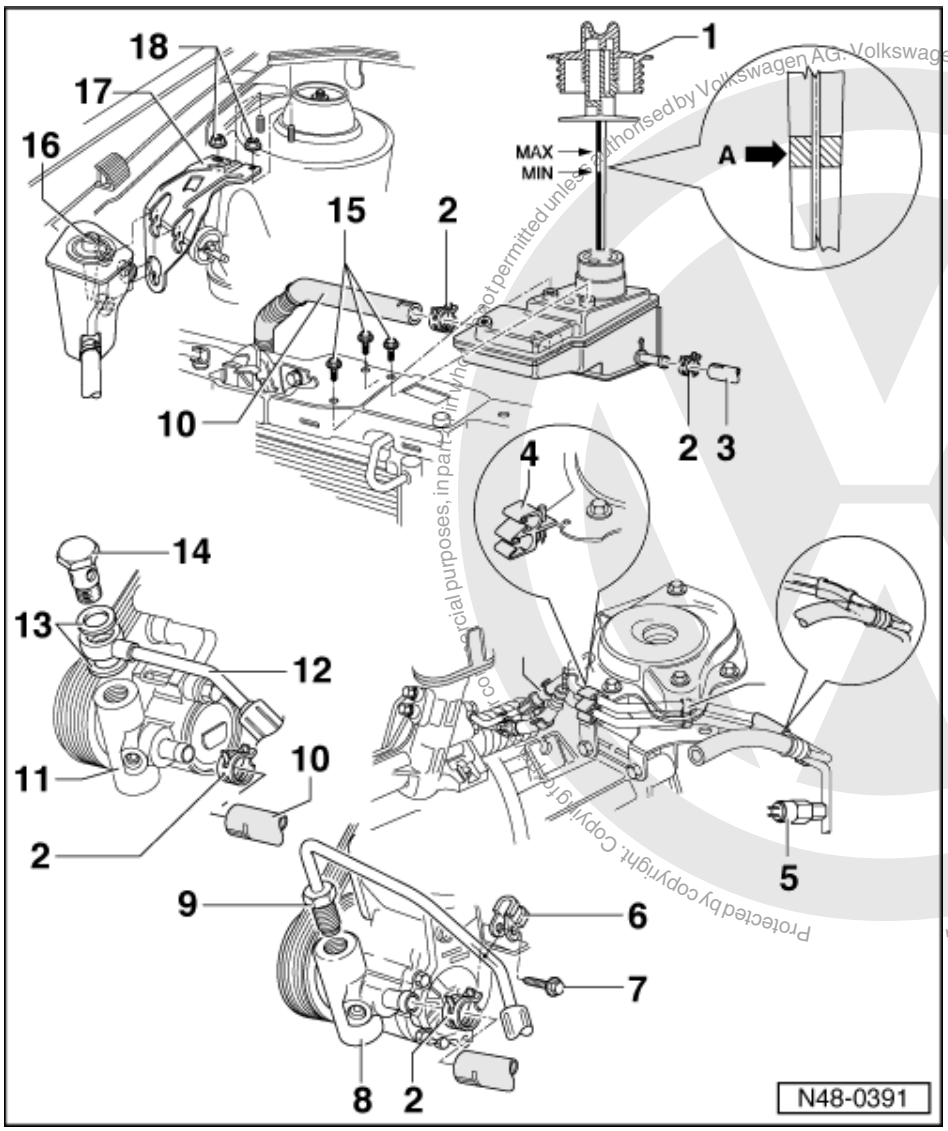

12 Pressure hose
13 Sealing ring
- Renew

14 Banjo bolt, 30 Nm
15 Hexagon bolt, 5 Nm
16 Reservoir
- For vehicles fitted with petrol engine
- Checking oil level; => item 1

17 Retainer
- Is secured on suspension strut turret

18 Hexagon nut, 22 Nm

Protected by copyright. Copyright by Volkswagen AG. Volkswagen AG does not guarantee or accept any liability with respect to the correctness of information in this document. Copyright by Volkswagen AG. Copying for commercial purposes, in part or in whole, is not permitted unless authorised by Volkswagen AG.
satelettronica

4.2 - Removing and installing power-assisted steering vane pump

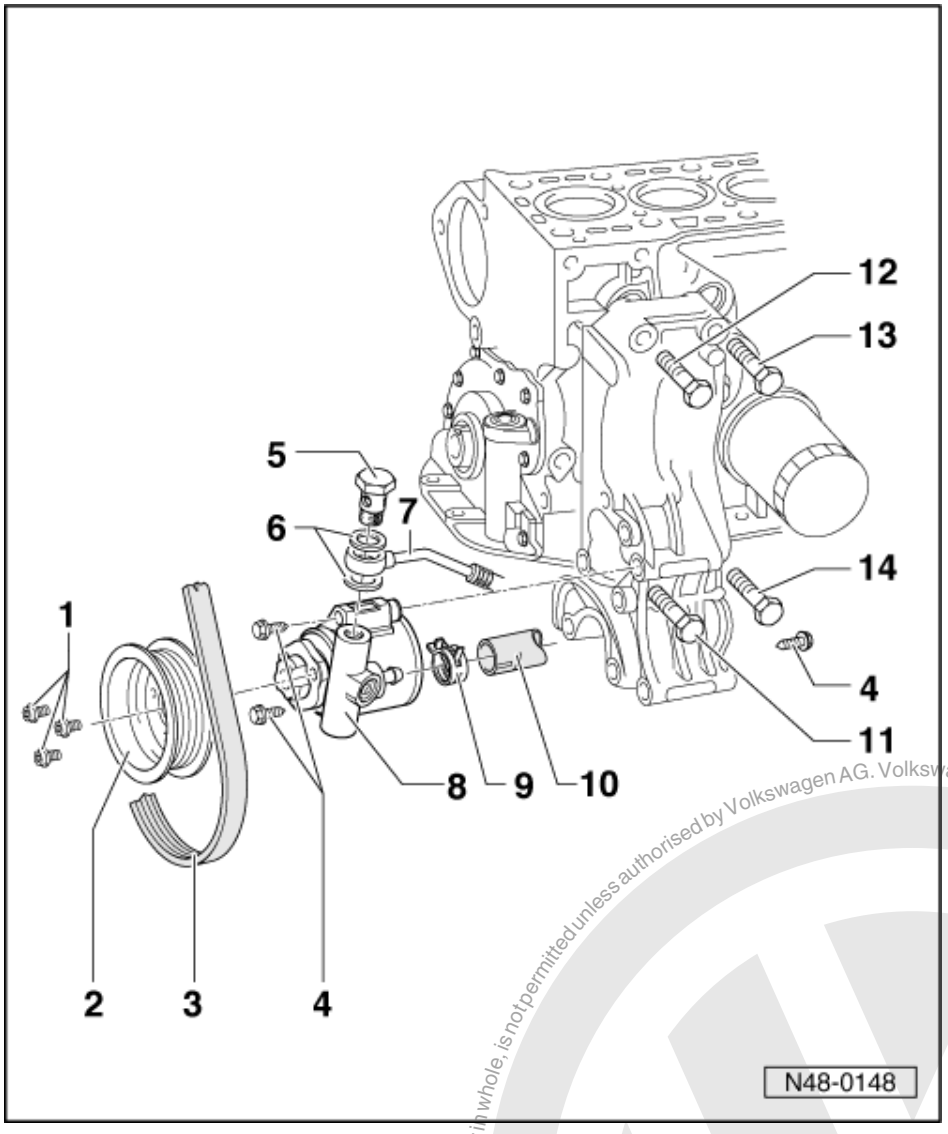

Notes:

- Renew sealing rings.
- Do not reuse drawn off hydraulic oil.
- Filling capacity and type of oil => Notes Page 185

1 25 Nm
- To loosen and tighten, removing and installing ribbed belts => Page 192
- When loosening and tightening counter-hold with V.A.G 1590

2 Belt pulley

3 Ribbed belts
- Removing and installing => Page 192
- Checking condition

=> Maintenance

Protected by copyright. Copying for private or commercial purposes, in part or in whole, is not permitted unless authorised by Volkswagen AG. Volkswagen AG does not guarantee or accept any liability with respect to the correctness of information in this document. Copyright by Volkswagen AG.
satelettronica

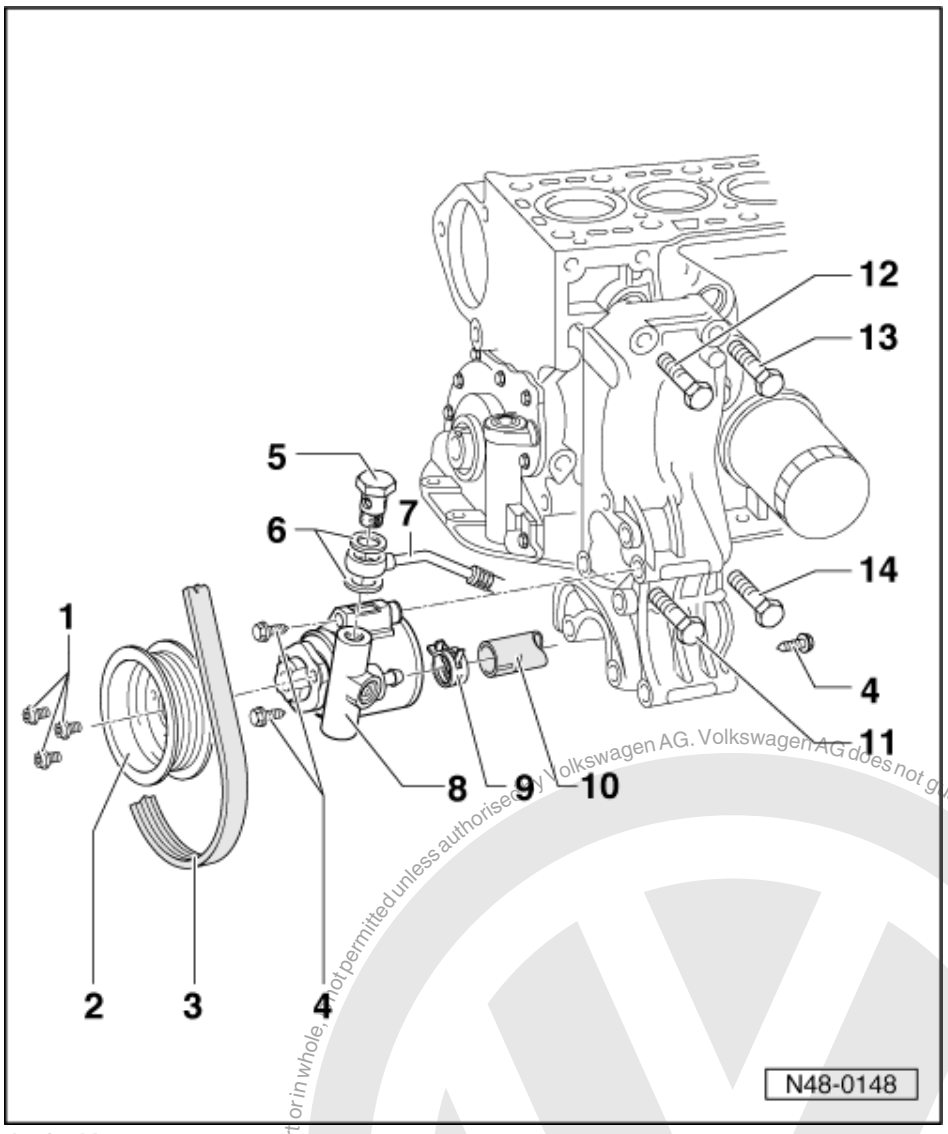

4 25 Nm
5 Banjo bolt, 30 Nm
- Loosening and tightening =>Fig. 1

6 Sealing ring
7 Pressure pipe
8 Vane pump
- Checking delivery pressure => Page 168
- Before installing fill with oil =>Note Page 185
  Vehicles with Diesel engine
- Lock carrier must be pulled forwards to remove vane pump => Page 168

9 Spring-type clamp
10 Supply hose
- After assembling ensure that the supply hose is not twisted.
- According to version coloured marking aligns with housing joint edge or mark on pump support.

Protected by copyright. Copying for private or commercial purposes, in part or in whole, is not permitted unless authorised by Volkswagen AG. Volkswagen AG does not guarantee or accept any liability with respect to the correctness of information in this document. Copyright by Volkswagen AG.
satelettronica

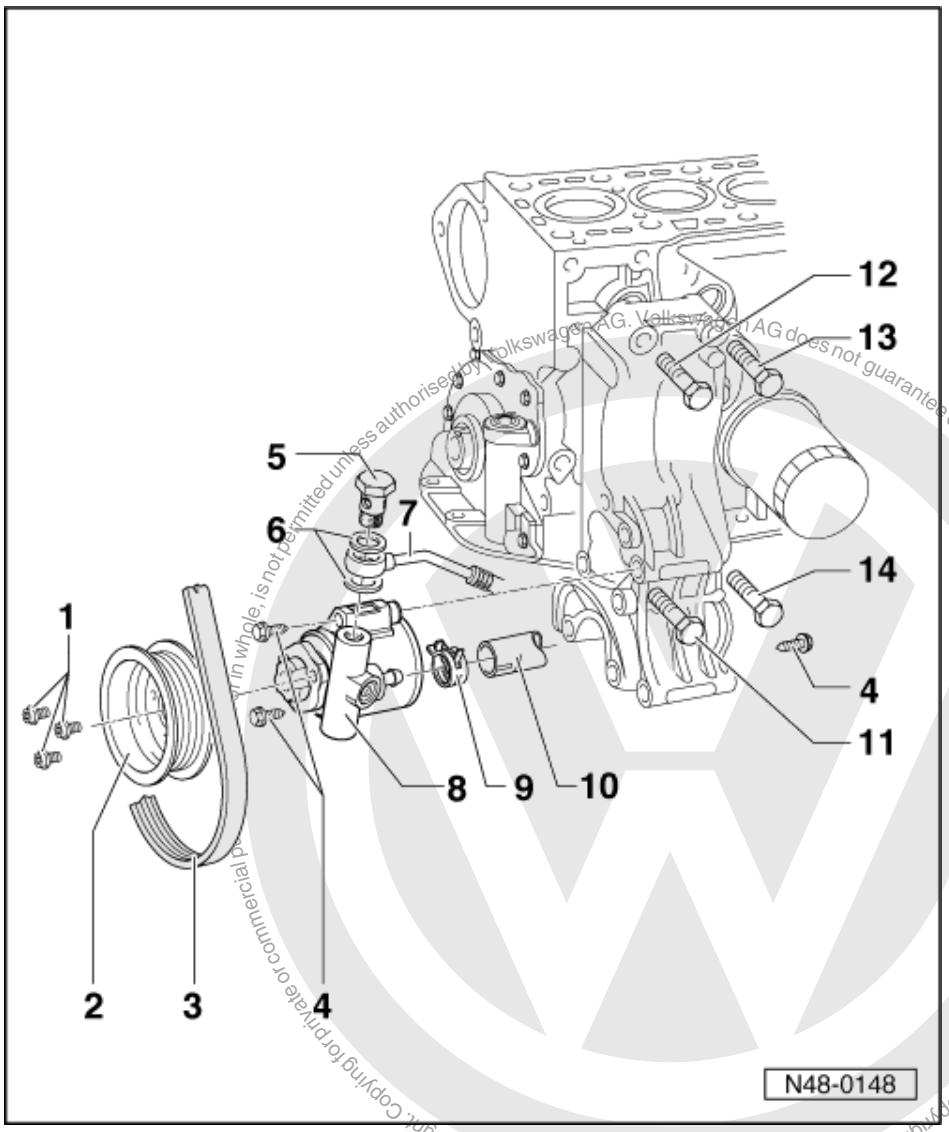

Protected by copyright. Copying for private or commercial purposes, in whole, is not permitted unless authorised by Volkswagen AG. Volkswagen AG does not guarantee or accept any liability with respect to the correctness of information in this document. Copyright by Volkswagen AG.

satelettronica

11 Hexagon bolt M 10 x 70, 45 Nm
- Assembly sequence => Note below

12 Hexagon bolt M 10 x 55, 45 Nm
- Assembly sequence => Note below

13 Hexagon bolt M 10 x 55, 45 Nm
- Assembly sequence => Note below

14 Hexagon bolt M 10 x 70, 45 Nm
- Assembly sequence => Note below

Note:

Assembly sequence:

First tighten bolt item 12 and then bolt item 11, and then tighten bolts items 13 and 14.

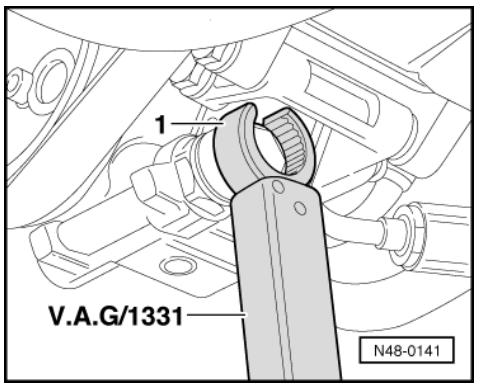

-> Fig.1 Loosening and tightening hexagon nut
1 - Ring ended insert (commercially available)

4.3 - Removing and installing ribbed belt

Protected by copyright. Copyright by Volkswagen AG. Volkswagen AG does not guarantee or accept any liability with respect to the correctness of information in this document. Copying for private or commercial purposes, in part or in whole, is not permitted unless authorised by Volkswagen AG.

Vehicles with petrol engine
Note:
Before removing the ribbed belt mark the direction of rotation. When installing the belt ensure it is correctly seated in the pulley.

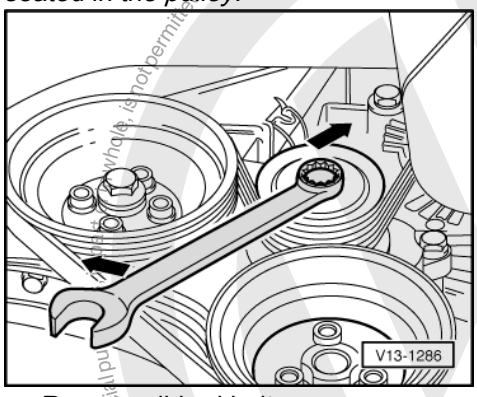

- Remove ribbed belt cover.
- -> Using a spanner on the securing bolt swing tensioning roller in direction of arrow.
- Remove or install ribbed belts.

Vehicles with Diesel engine
Note:
Before removing the ribbed belt mark the direction of rotation. When installing the belt ensure it is correctly seated in the pulley.
- Remove noise insulation tray.

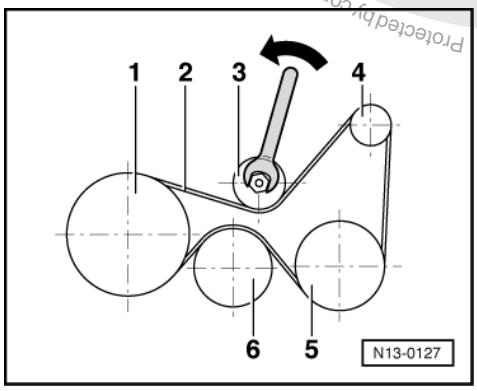

satelettronica

- -> Swing tensioning roller in direction of arrow using open jaw spanner 15 mm A/F on tensioning lever.
- Remove/fit ribbed belt.

Ribbed belt routing

1 - Vibration damper/belt pulley
2 - Ribbed belt
3 - Tensioner
4 - Pulley - alternator
5 - Pulley - P.A.S. vane pump
6 - Pulley - coolant pump

Protected by copyright. Copying for private or commercial purposes, in part or in whole, is not permitted unless authorised by Volkswagen AG. Volkswagen AG does not guarantee or accept any liability with respect to the correctness of information in this document. Copyright by Volkswagen AG.

satelettronica